MIAMI-DADE COUNTY
DEPARTMENT OF PERMITTING, ENVIRONMENT, AND REGULATORY AFFAIRS (PERA)
BOARD AND CODE ADMINISTRATION DIVISION

NOTICE OF ACCEPTANCE (NOA)

MIAMI-DADE COUNTY
PRODUCT CONTROL SECTION
11805 SW 26 Street, Room 208
Miami, Florida 33175-2474
T (786) 315-2590 F (786) 315-2599
www.miamidade.gov/pera/

PGT Industries
1070 Technology Drive
North Venice, FL 34275

SCOPE:

This NOA is being issued under the applicable rules and regulations governing the use of construction materials. The documentation submitted has been reviewed and accepted by Miami-Dade County PERA -Product Control Section to be used in Miami Dade County and other areas where allowed by the Authority Having Jurisdiction (AHJ).

This NOA shall not be valid after the expiration date stated below. The Miami-Dade County Product Control Section (In Miami Dade County) and/or the AHJ (in areas other than Miami Dade County) reserve the right to have this product or material tested for quality assurance purposes. If this product or material fails to perform in the accepted manner, the manufacturer will incur the expense of such testing and the AHJ may immediately revoke, modify, or suspend the use of such product or material within their jurisdiction. PERA reserves the right to revoke this acceptance, if it is determined by Miami-Dade County Product Control Section that this product or material fails to meet the requirements of the applicable building code.

This product is approved as described herein, and has been designed to comply with the Florida Building Code, including the High Velocity Hurricane Zone.

DESCRIPTION: Series "FD-101" Outswing Aluminum French Door w/ Sidelites – Non-Impact

APPROVAL DOCUMENT: Drawing No.**11005-2 Rev C**, titled "Outswing Non-Impact French door(s) & Sidelite(s)", sheets 1through 11 of 11, prepared by manufacturer, dated 02/28/07 and last revised on 10/11/11, signed and sealed by Lynn Miller, P.E., bearing the Miami-Dade County Product Control Revision stamp with the Notice of Acceptance number and expiration date by the Miami-Dade County Product Control Section.

MISSILE IMPACT RATING: None: Approved Hurricane Protection devices, complying w/ FBC, as applicable are required.

Limitations:

1. Use of Table **1** or **2** (sheet 1) requires full length reinforcements (item # 22) for OX, XO, XXO, OXX, OXO and OXXO configurations. The lower design pressure from table 1 or table 2 shall control.
2. Egress operable doors must comply with min clear width per FBC, as applicable.
3. Nominal ¼" max. airspace is applicable for I.G. glazing with spacer item # 102.

LABELING: Each unit shall bear a permanent label with the manufacturer's name or logo, city, state and series and following statement: "Miami-Dade County Product Control Approved", noted herein.

RENEWAL of this NOA shall be considered after a renewal application has been filed and there has been no change in the applicable building code negatively affecting the performance of this product.

TERMINATION of this NOA will occur after the expiration date or if there has been a revision or change in the materials, use, and/or manufacture of the product or process. Misuse of this NOA as an endorsement of any product, for sales, advertising or any other purposes shall automatically terminate this NOA. Failure to comply with any section of this NOA shall be cause for termination and removal of NOA.

ADVERTISEMENT: The NOA number preceded by the words Miami-Dade County, Florida, and followed by the expiration date may be displayed in advertising literature. If any portion of the NOA is displayed, then it shall be done in its entirety.

INSPECTION: A copy of this entire NOA shall be provided to the user by the manufacturer or its distributors and shall be available for inspection at the job site at the request of the Building Official.

This NOA **renews NOA # 11-1013.21** and consists of this page 1 and evidence pages E-1, as well as approval document mentioned above.

The submitted documentation was reviewed by **Ishaq I. Chanda, P.E.**

MIAMI-DADE COUNTY APPROVED

7/23/12

NOTICE OF ACCEPTANCE: EVIDENCE SUBMITTED

A. DRAWINGS

1. Manufacturer's die drawings and sections (submitted under file **# 11-1013.21**).
2. Drawing No.**11005-2 Rev C**, titled "Outswing Non-Impact French door(s) & Sidelite(s)", sheets 1through 11 of 11, prepared by manufacturer, dated 02/28/07 and last revised on 10/11/11, signed and sealed by Lynn Miller, P.E.

A. TESTS (submitted under file **# 11-1013.21**)

Test report on 1) Air Infiltration Test, per FBC, TAS 202-94
2) Uniform Static Air Pressure Test, per FBC, TAS 202-94
3) Water Resistance Test, per FBC, TAS 202-94.
4) Forced Entry Test, per FBC 2411 3.2.1 (b) and TAS 202-94

Along with marked-up drawings and installation diagram of aluminum out swinging French door w/ sidelites, prepared by Fenestration Testing Laboratory, Inc., Test Report No(s). **FTL-4964**, dated September 09, 2006, signed and sealed by Edmundo Largaespada, P.E.

C. CALCULATIONS (submitted under file **# 11-1013.21**)

1. Statement letter dated OCT 11, 2011, compliance to FBC 2007 & FBC 2010, prepared by PGT, signed & sealed by Lynn Miller, P.E.
2. Statement letter dated 10/07/11, Successor Engineer adopting the another engineer's work per FAR 61G15-27-001, signed & sealed by Lynn Miller, P.E.
3. Anchor verification and comparative analysis dated 03-02-07 and last revised on 06/08/07, prepared by PGT, signed and sealed by Robert L. Clark, P.E. (transferred from file **# 07-0309.09**)
3. Glazing complies with ASTME-1300-02 &-04

D. QUALITY ASSURANCE

1. Miami Dade Department of Permitting, Environment, and Regulatory Affairs (PERA).

E. MATERIAL CERTIFICATIONS

1. None

F. STATEMENTS

1. Statement letter of conformance and letter of no financial interest, prepared by PGT, dated 05/14/12, signed and sealed by Lyn Miller, P.E.
2. Statement letter issued by PGT, dated 05/14/12, "Renewal with no change "signed and sealed by Lyn Miller, P.E.
3. Statement letter dated OCT 11, 2011, compliance to FBC 2007 & FBC 2010 and "No financial interest", prepared by PGT, signed & sealed by Lynn Miller, P.E. (submitted under file **# 11-1013.21**).
4. Statement letter of conformance and no financial interest, dated 03-02-07, signed by Robert L. Clark, P.E. (transferred from file **# 07-0309.09**)
5. Letter of lab compliance, part of the above test reports.

G. OTHER

1. This NOA **renews # 11-1013.21**, expiring August 02, 2012.
2. Test proposal dated Jan. 17, 2007 approved by BCCO.

Ishaq I. Chanda

Ishaq I. Chanda, P.E.
Product Control Examiner
NOA No 12-0516.03
Expiration Date: August 02, 2017
Approval Date: August 02, 2012

NOTES: OUTSWING NON-IMPACT FRENCH DOOR(S) AND SIDE LITE(S)

1. GLAZING OPTIONS:
   A. 3/16" TEMPERED GLASS
   B. 5/8" I.G. GLASS CONSISTING OF (2) LITES OF 3/16" TEMPERED GLASS WITH AN AIR SPACE BETWEEN.
2. DESIGN PRESSURES: (TABLES 1 AND 2, SHEET 1 AND TABLES 1A AND 2A, SHEET 2)
   A. NEGATIVE DESIGN LOADS BASED ON TESTED PRESSURE AND GLASS TABLES ASTM E 1300-02.
   B. POSITIVE DESIGN LOADS BASED ON WATER TEST PRESSURE AND GLASS TABLES ASTM E 1300-02.
3. CONFIGURATIONS: X, O, XX, XO, OX, XXO, OXX, OXO, AND OXXO.
4. ANCHORAGE: THE 33 1/3% STRESS INCREASE HAS NOT BEEN USED IN THE DESIGN OF THIS PRODUCT. FOR ANCHORAGE REQUIREMENTS SEE SHEETS 8-11. MATERIALS, INCLUDING BUT NOT LIMITED TO STEEL SCREWS, THAT COME INTO CONTACT WITH OTHER DISSIMILAR MATERIALS SHALL MEET THE REQUIREMENTS OF THE FBC, CURRENT EDITION.
5. SHUTTERS ARE REQUIRED WHERE IMPACT RESISTANCE REQUIRED. SHUTTERS MUST BE MIAMI-DADE COUNTY APPROVED FOR INSTALLATION IN MIAMI-DADE COUNTY.
6. SEALANTS: INSTALLATION SCREWS, FRAME AND PANEL CORNERS SEALED WITH CLEAR COLORED SEALANT.
7. REFERENCES: TEST REPORT FTL-4964, ELCO TEXTRON NOA: 04-0721.01, 03-0225.05, ANSI/AF&PA NDS-2001 FOR WOOD CONSTRUCTION, ADM-2005 ALUMINUM DESIGN MANUAL
8. THIS PRODUCT HAS BEEN DESIGNED & TESTED TO COMPLY WITH THE REQUIREMENTS OF THE FLORIDA BUILDING CODE, INCLUDING THE HIGH VELOCITY HURRICANE ZONE (HVHZ).
9. CONFIGURATIONS WHICH CONTAIN A SIDE LITE TO DOOR CONNECTION :
   A. THE LOWER DESIGN PRESSURE FROM TABLE 1. OR 2. PREVAILS.
   B. FULL LENGTH REINFORCEMENT (ITEM 22 SHOWN IN SECTION E-E, SHEET 5), IS REQUIRED ONLY AT ALL DOOR TO SIDE LITE CONNECTIONS FROM TABLE 1 AND 2. ONLY REFER TO TABLES 1A AND 2A, SHEET 2 FOR DOOR TO SIDE LITE CONNECTIONS WHICH DO NOT REQUIRE ITEM 22 REINFORCEMENT.
10. SINGLE DOORS 33 5/8" WIDE OR OVER AND THE OPERABLE PANEL OF DOUBLE DOORS 64 1/8" WIDE OR OVER COMPLY WITH THE EGRESS REQUIREMENTS OF THE FBC. NARROWER DOORS MAY BE USED WHERE EGRESS IS NOT REQUIRED BY CODE. (B)

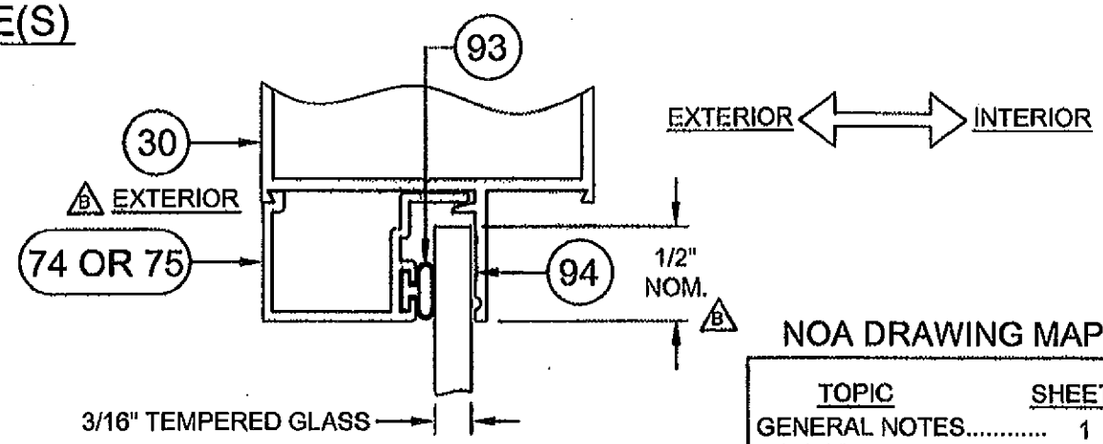

3/16" GLAZING OPTION

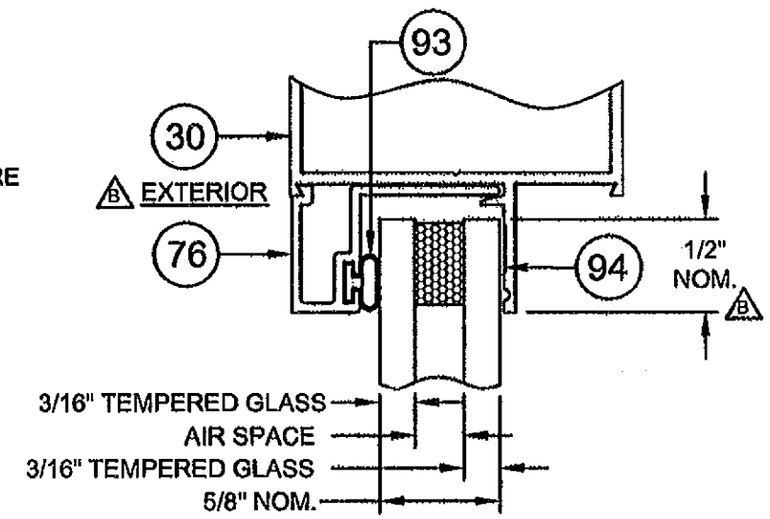

5/8" I.G. GLAZING OPTION

NOA DRAWING MAP

TOPIC	SHEET
GENERAL NOTES	1
CONFIGURATIONS	1, 2
GLAZING DETAILS	1
DESIGN PRESSURES	1
ALT. DESIGN PRESSURES	2
ELEVATIONS	3
VERT. SECTIONS	4
HORIZ. SECTIONS	5
PARTS LIST	6
EXTRUSIONS	6, 7
ANCHORAGE	8-11

TABLE 1. DESIGN PRESSURES: OUTSWING DOORS (SEE NOTE 9A AND 9B ABOVE FOR OX,XO,XXO,OXX,OXO & OXXO) (B)

CONFIG.	DOOR WIDTH	DOOR HEIGHT 6⁸ - 79 3/4"		7⁰ - 83 3/4"		87 3/4"		91 3/4"		8⁰ - 95 3/4"	
X	2⁰ 25 1/2"	+75.0	-112.1	+75.0	-105.8	+75.0	-100.2	+75.0	-95.2	+75.0	-90.7
X	27 1/2"	+75.0	-105.0	+75.0	-99.0	+75.0	-93.7	+75.0	-89.0	+75.0	-84.7
X	29 1/2"	+75.0	-98.9	+75.0	-93.2	+75.0	-88.2	+75.0	-83.7	+75.0	-79.6
X	2⁶ 31 1/2"	+75.0	-93.7	+75.0	-88.3	+75.0	-83.4	+75.0	-79.1	+75.0	-75.2
X	2⁸ 33 1/2"	+75.0	-82.3	+75.0	-82.3	+75.0	-79.3	+75.0	-75.1	+71.3	-71.3
X	35 1/2"	+72.9	-72.9	+72.9	-72.9	+72.9	-72.9	+71.6	-71.6	+68.0	-68.0
X	3⁰ 37 1/2"	+65.0	-65.0	+65.0	-65.0	+65.0	-65.0	+65.0	-65.0	+65.0	-65.0
XX	4⁰ 47 3/4"	+75.0	-112.1	+75.0	-105.8	+75.0	-100.2	+75.0	-95.2	+75.0	-90.7
XX	51 3/4"	+75.0	-105.0	+75.0	-99.0	+75.0	-93.7	+75.0	-89.0	+75.0	-84.7
XX	55 3/4"	+75.0	-98.9	+75.0	-93.2	+75.0	-88.2	+75.0	-83.7	+75.0	-79.6
XX	5⁰ 59 3/4"	+75.0	-93.7	+75.0	-88.3	+75.0	-83.4	+75.0	-79.1	+75.0	-75.2
XX	5⁴ 63 3/4"	+75.0	-82.3	+75.0	-82.3	+75.0	-79.3	+75.0	-75.1	+71.3	-71.3
XX	67 3/4"	+72.9	-72.9	+72.9	-72.9	+72.9	-72.9	+71.6	-71.6	+68.0	-68.0
XX	6⁰ 71 3/4"	+65.0	-65.0	+65.0	-65.0	+65.0	-65.0	+65.0	-65.0	+65.0	-65.0

TABLE 2. DESIGN PRESSURES: SIDE LITE (SEE NOTE 9A & 9B ABOVE) (B)

SIDE LITE WIDTH	SIDE LITE HEIGHT 6⁸ - 79 3/4"		7⁰ - 83 3/4"		87 3/4"		91 3/4"		8⁰ - 95 3/4"	
10 3/4"	+75.0	-150.0	+75.0	-150.0	+75.0	-150.0	+75.0	-150.0	+75.0	-150.0
12 3/4"	+75.0	-150.0	+75.0	-150.0	+75.0	-150.0	+75.0	-150.0	+75.0	-150.0
19"	+75.0	-138.6	+75.0	-131.0	+75.0	-124.3	+75.0	-118.3	+75.0	-112.8
21 3/4"	+75.0	-123.4	+75.0	-116.6	+75.0	-110.5	+75.0	-105.1	+75.0	-100.1
27 3/4"	+75.0	-101.1	+75.0	-95.3	+75.0	-90.2	+75.0	-85.5	+75.0	-81.3
36 1/8"	+67.3	-67.3	+67.3	-67.3	+67.3	-67.3	+67.3	-67.3	+65.9	-65.9
36 3/4"	+65.0	-65.0	+65.0	-65.0	+65.0	-65.0	+65.0	-65.0	+65.0	-65.0

PRODUCT REVISED as complying with the Florida Building Code
Acceptance No. 11-1013.21
Expiration Date Aug 02, 2012
By Ishwar L. Chand
Manager Product Control

PRODUCT RENEWED as complying with the Florida Building Code
Acceptance No. 12-0516.03
Expiration Date 08/02/2017
By Ishwar L. Chand
Manager Product Control

ANTHONY LYNN MILLER LICENSE No. 58705 STATE OF FLORIDA PROFESSIONAL ENGINEER
10/11/11

A. LYNN MILLER, P.E.
FL P.E.# 58705

Revised By:	Date:	Revisions:	
J.J.	10/10/11	C	FBC 2010 CODE CHANGE
F.K.	8/25/07	B	ADD NOTE REF. TO TABLES 1 & 2 AND EXT. DESIGNATION TO GLAZING DET. EMBELLISH NOTE 10. ADD GLASS BITE DIM.
F.K.	4/27/07	A	REVISE TABLE 1 AND 2 DESIGN PRESSURES PER 1300-02 AT TESTED 65 PSF. UPDATE NOTE 7, ADM 2005. REVISE NOTE 8, REINF. ADD NOTE 10.
Drawn By: F.K.	Date: 1/15/07	Checked By: J.J.	Date: 2/28/07

1070 TECHNOLOGY DRIVE
NOKOMIS, FL 34275

P.O. BOX 1529
NOKOMIS, FL 34274

PGT Visibly Better

Description: NOTES, DESIGN PRESSURES & GLAZING DETAILS

Title: ALUM. FRENCH DOOR & SIDE LITES, NON-IMPACT

Series/Model:	Scale:	Sheet:	Drawing No.	Rev:
FD101	1x	1 of 11	11005-2	C

TABLE 1A. DESIGN PRESSURES: OUTSWING DOORS

CONFIG.	DOOR WIDTH	DOOR HEIGHT									
		6^8 - 79 3/4"		7^0 - 83 3/4"		87 3/4"		91 3/4"		8^0 - 95 3/4"	
X	2^0 25 1/2"	+60.0	-60.3	+57.0	-57.0	+54.0	-54.0	+51.3	-51.3	+48.8	-48.8
X	27 1/2"	+56.5	-56.5	+53.3	-53.3	+50.5	-50.5	+47.9	-47.9	+45.6	-45.6
X	29 1/2"	+53.3	-53.3	+50.2	-50.2	+47.5	-47.5	+45.0	-45.0	+42.8	-42.8
X	2^6 31 1/2"	+50.5	-50.5	+47.5	-47.5	+44.9	-44.9	+42.6	-42.6	+40.5	-40.5
X	2^8 33 1/2"	+44.3	-44.3	+44.3	-44.3	+42.7	-42.7	+40.4	-40.4	+38.4	-38.4
X	35 1/2"	+39.3	-39.3	+39.3	-39.3	+39.3	-39.3	+38.6	-38.6	+36.6	-36.6
X	3^0 37 1/2"	+35.0	-35.0	+35.0	-35.0	+35.0	-35.0	+35.0	-35.0	+35.0	-35.0
XX	4^0 47 3/4"	+60.0	-60.3	+57.0	-57.0	+54.0	-54.0	+51.3	-51.3	+48.8	-48.8
XX	51 3/4"	+56.5	-56.5	+53.3	-53.3	+50.5	-50.5	+47.9	-47.9	+45.6	-45.6
XX	55 3/4"	+53.3	-53.3	+50.2	-50.2	+47.5	-47.5	+45.0	-45.0	+42.8	-42.8
XX	5^0 59 3/4"	+50.5	-50.5	+47.5	-47.5	+44.9	-44.9	+42.6	-42.6	+40.5	-40.5
XX	5^4 63 3/4"	+44.3	-44.3	+44.3	-44.3	+42.7	-42.7	+40.4	-40.4	+38.4	-38.4
XX	67 3/4"	+39.3	-39.3	+39.3	-39.3	+39.3	-39.3	+38.6	-38.6	+36.6	-36.6
XX	6^0 71 3/4"	+35.0	-35.0	+35.0	-35.0	+35.0	-35.0	+35.0	-35.0	+35.0	-35.0

TABLE 2A. DESIGN PRESSURES: SIDE LITE

SIDE LITE WIDTH	SIDE LITE HEIGHT									
	6^8 - 79 3/4"		7^0 - 83 3/4"		87 3/4"		91 3/4"		8^0 - 95 3/4"	
10 3/4"	+60.0	-120.0	+60.0	-118.1	+60.0	-112.4	+60.0	-107.2	+60.0	-102.4
12 3/4"	+60.0	-106.4	+60.0	-100.9	+60.0	-95.9	+60.0	-91.4	+60.0	-87.3
19"	+60.0	-74.6	+60.0	-70.5	+60.0	-66.9	+60.0	-63.7	+60.0	-60.7
21 3/4"	+60.0	-66.4	+60.0	-62.8	+59.5	-59.5	+56.6	-56.6	+53.9	-53.9
27 3/4"	+54.4	-54.4	+51.3	-51.3	+48.5	-48.5	+46.1	-46.1	+43.8	-43.8
36 1/8"	+36.2	-36.2	+36.2	-36.2	+36.2	-36.2	+36.2	-36.2	+35.5	-35.5
36 3/4"	+35.0	-35.0	+35.0	-35.0	+35.0	-35.0	+35.0	-35.0	+35.0	-35.0

NOTES:

1. CONFIGURATIONS WHICH CONTAIN A SIDE LITE TO DOOR CONNECTION :
   A. THE LOWER DESIGN PRESSURE FROM TABLE 1A. OR 2A. PREVAILS.
   B. DOOR AND SIDE LITE COMBINATIONS FROM TABLES 1A. AND 2A. DO NOT REQUIRE REINFORCEMENT ITEM 22.
2. POSITIVE DESIGN PRESSURE IS LIMITED TO 60 P.S.F (WATER RESISTANCE 9.0 P.S.F.) FOR DOORS AND SIDE LITES IN TABLES 1A AND 2A.
3. DESIGN PRESSURES UNDER 40 P.S.F. ARE NOT APPLICABLE IN MIAMI-DADE COUNTY.

PRODUCT REVISED
as complying with the Florida Building Code
Acceptance No. 11-1013.21
Expiration Date Aug 02, 2012
By Ishaq I. Chauda
Miami Dade Product Control

PRODUCT RENEWED
as complying with the Florida Building Code
Acceptance No. 12-0516.03
Expiration Date 08/02/17
By Ishaq I. Chauda
Miami Dade Product Control

ANTHONY LYNN MILLER
LICENSE
No. 58705
10/11/11
STATE OF FLORIDA
PROFESSIONAL ENGINEER

A. LYNN MILLER, P.E.
FL P.E.# 58705

Revsd By:	Date:	Revisions:	
J.J.	10/10/11	C	NO CHANGE THIS SHEET
F.K.	6/25/07	B	NO CHANGES THIS SHEET
F.K.	4/27/07	A	NEW SHEET. ADD TABLES 1A AND 2A FOR 35 PSF TESTED DOOR WITHOUT REINFORCEMENT IN SIDE LITE TO DOOR CONNECTION.
Drawn By: F.K.	Date: 1/15/07	Checked By: J.J.	Date: 2/28/07

1070 TECHNOLOGY DRIVE
NOKOMIS, FL 34275
P.O. BOX 1529
NOKOMIS, FL 34274

PGT Visibly Better

Description: ALTERNATE DESIGN PRESSURES

Title: ALUM. FRENCH DOOR & SIDE LITES, NON-IMPACT

Series/Model:	Scale:	Sheet:	Drawing No.	Rev:
FD101	NA	2 of 11	11005-2	C

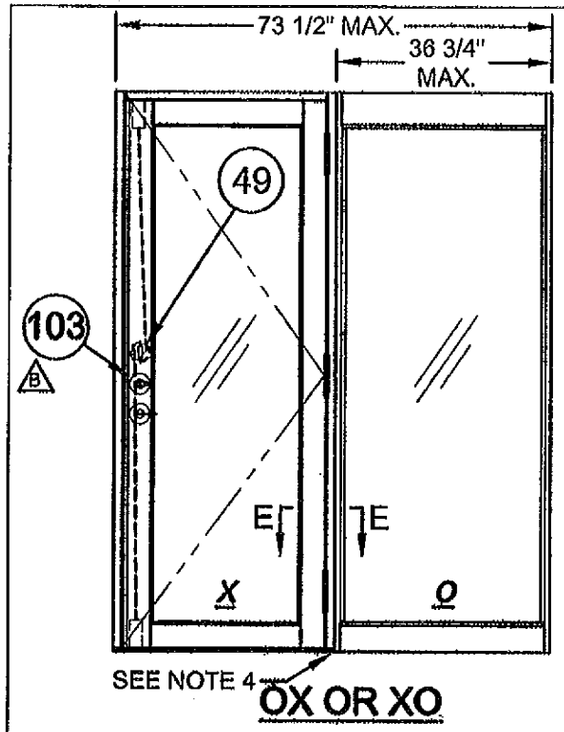

OX OR XO

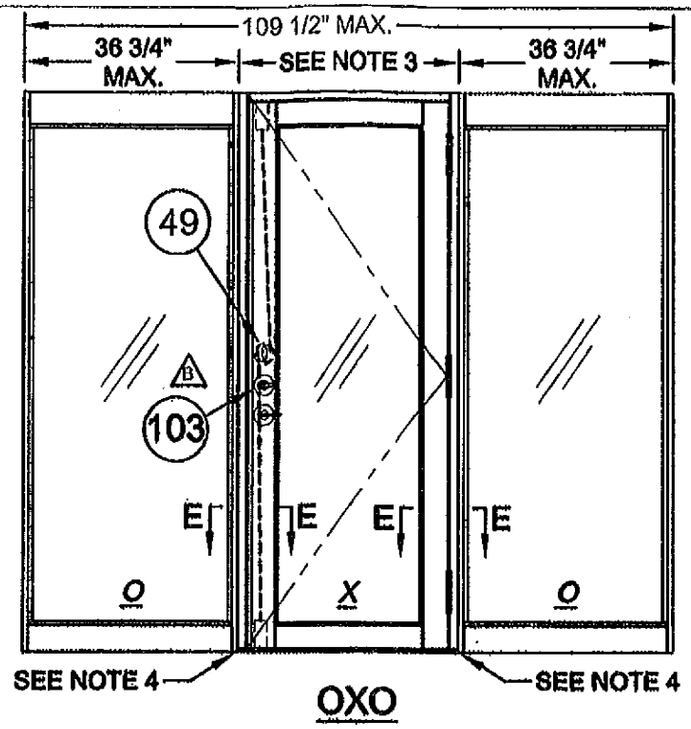

OXO

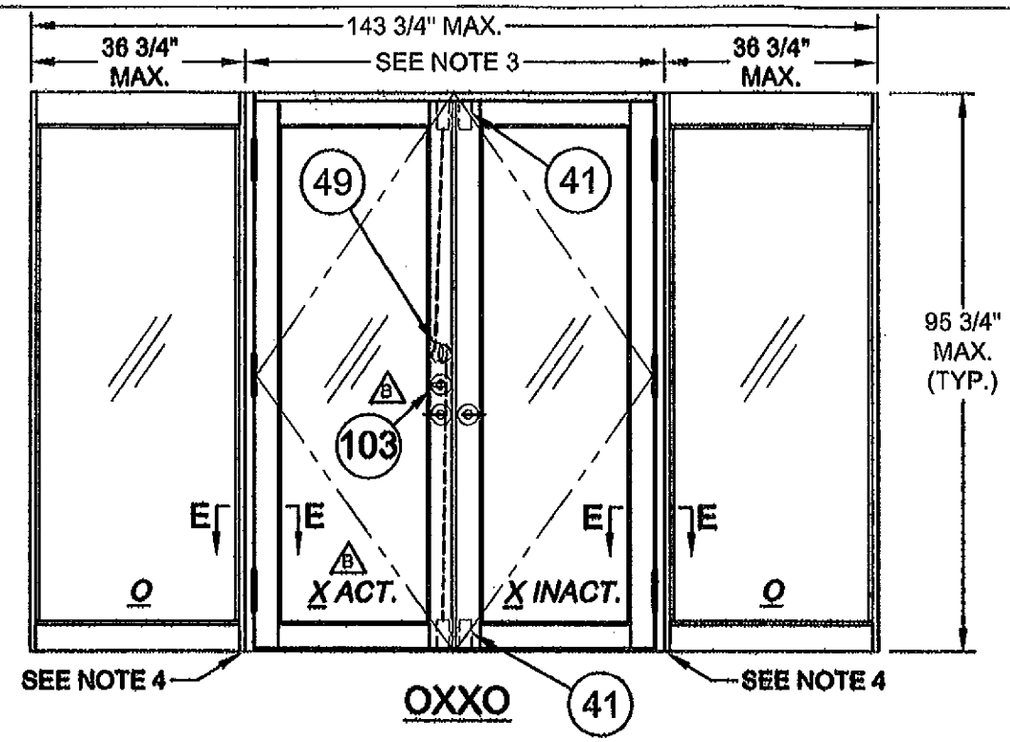

OXXO

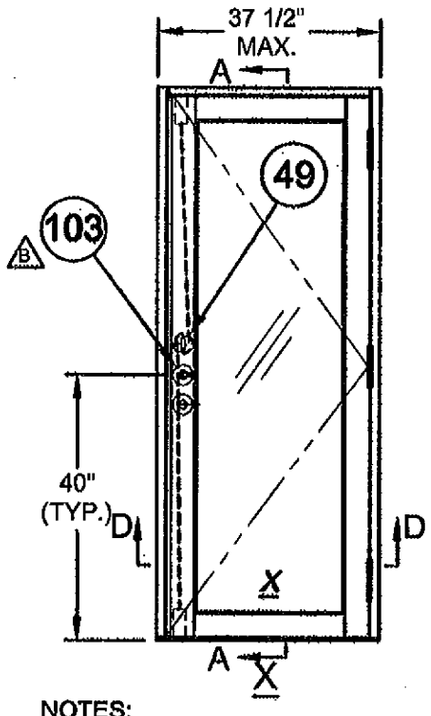

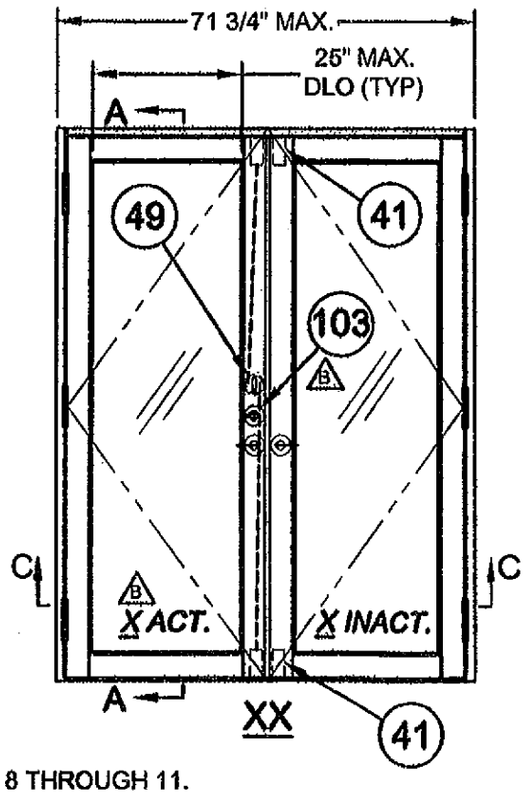

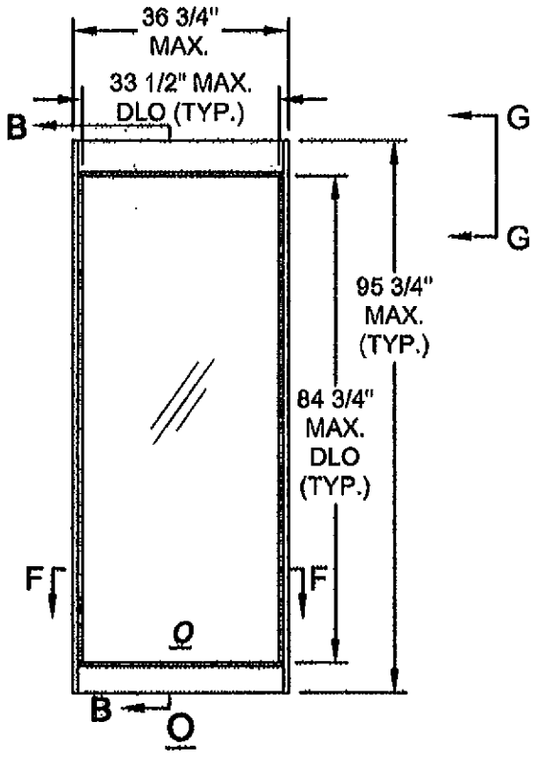

ACT.

NOTES:

1. FOR ANCHORAGE DETAILS SEE SHEETS 8 THROUGH 11.
2. FOR HORIZONTAL AND VERTICAL SECTIONS SEE SHEETS 4 AND 5.
3. SIDE LITES OVERLAP 'X' AND 'XX' DOORS BY 3/4" WHEN ASSEMBLED TO MAKE 'OXO' AND 'OXXO' CONFIGURATIONS.
4. SEE TABLES 1, 1A, 2, AND 2A ON SHEETS 1 AND 2 FOR APPLICABILITY OF REINFORCEMENT FOR DOOR AND SIDE LITE CONFIGURATIONS.
5. CLEAR OPENING FOR 'X' AND 'XX' DOORS AS FOLLOWS: ('X' DOORS = WIDTH - 5.646) ('XX' DOOR = DOOR WIDTH/2 -4.079)
6. B SIDE LITE DLO WIDTH = SIDE LITE WIDTH - 3 1/4" DWR/SIDE LITE DLO HEIGHT = SIDE LITE HEIGHT - 11" 11/15/11

Revised By:	Date:	Revisions:	
J.J.	10/10/11	C	NO CHANGE THIS SHEET
F.K.	6/28/07	B	IDENTIFY DEAD BOLT, ADD NOTE 6., AND SPECIFY 'X' ACT. AND 'X' INACT.
F.K.	4/27/07	A	CLARIFY FLUSH BOLT AND 2 PT. LOCK LOCATIONS, REVERSE DIR. OF 'C' & 'D' SECT. ARROWS. ADD NOTES 4 AND 6.
Drawn By: F.K.	Date: 1/15/07	Checked By: J.J.	Date: 2/28/07

1070 TECHNOLOGY DRIVE
NOKOMIS, FL 34275

P.O. BOX 1529
NOKOMIS, FL 34274

PGT Visibly Better

Description: EXAMPLE ELEVATIONS

Title: ALUM. FRENCH DOOR & SIDE LITES, NON-IMPACT

Series/Model:	Scale:	Sheet:	Drawing No.	Rev:
FD101	NTS	3 of 11	11005-2	C

PRODUCT REVISED
In complying with the Florida Building Code
Acceptance No. 11-1013.21
Expiration Date Aug 2, 2012.
By Miami-Dade Product Control

PRODUCT RENEWED
In complying with the Florida Building Code
Acceptance No. 12-0516.03
Expiration Date 03/02/17
By Miami-Dade Product Control

ANTHONY LYNN MILLER
LICENSE
No. 58705
10/11/11
STATE OF FLORIDA
PROFESSIONAL ENGINEER

A. LYNN MILLER, P.E.
FL P.E.# 58705

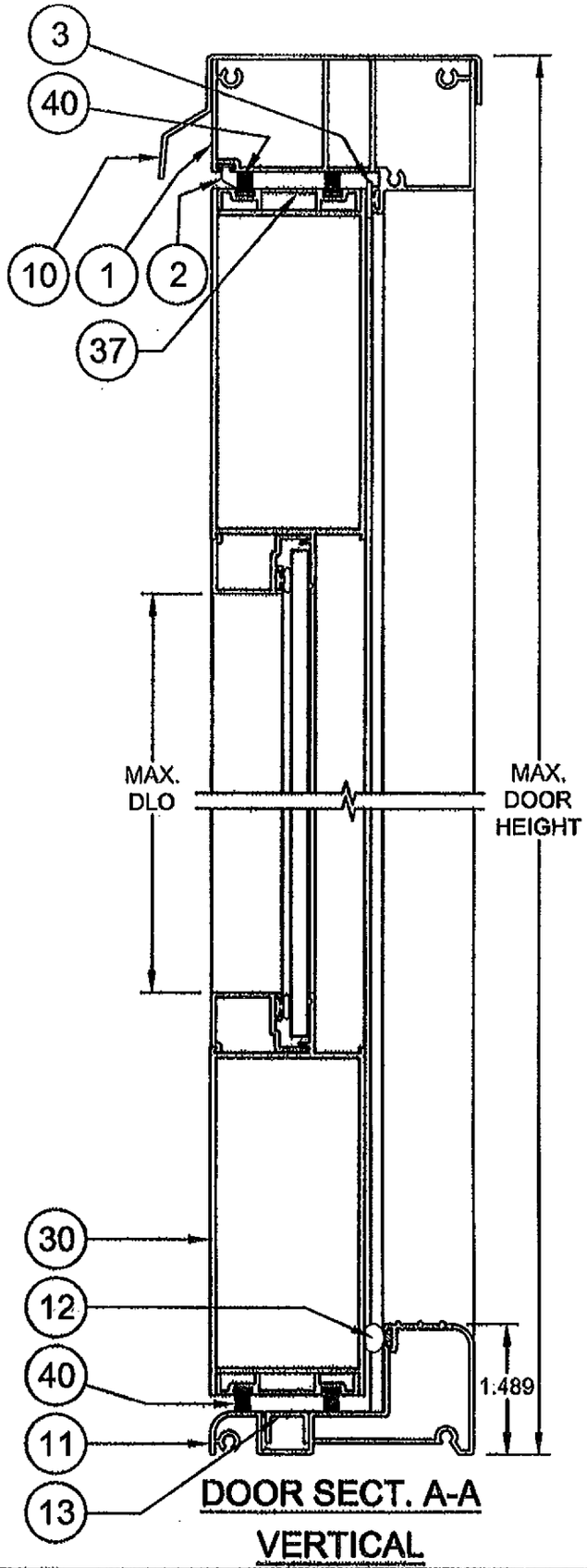

DOOR SECT. A-A

VERTICAL

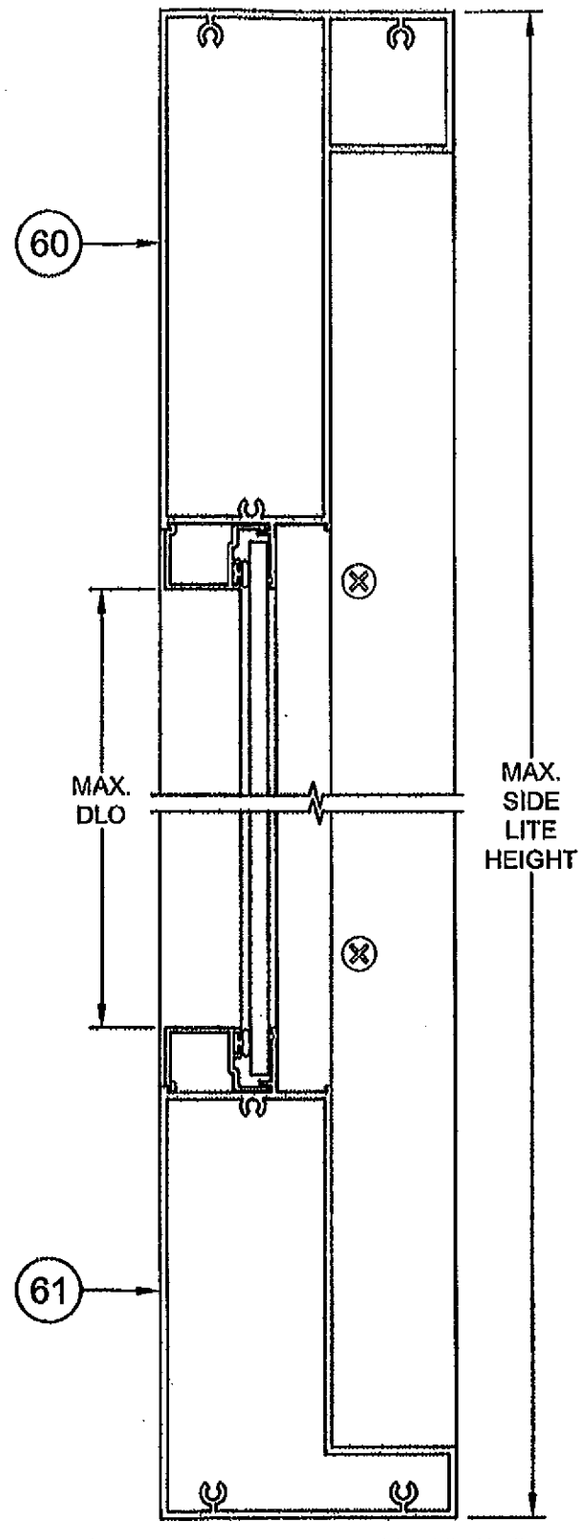

SIDE LITE (SL) SECT. B-B

VERTICAL

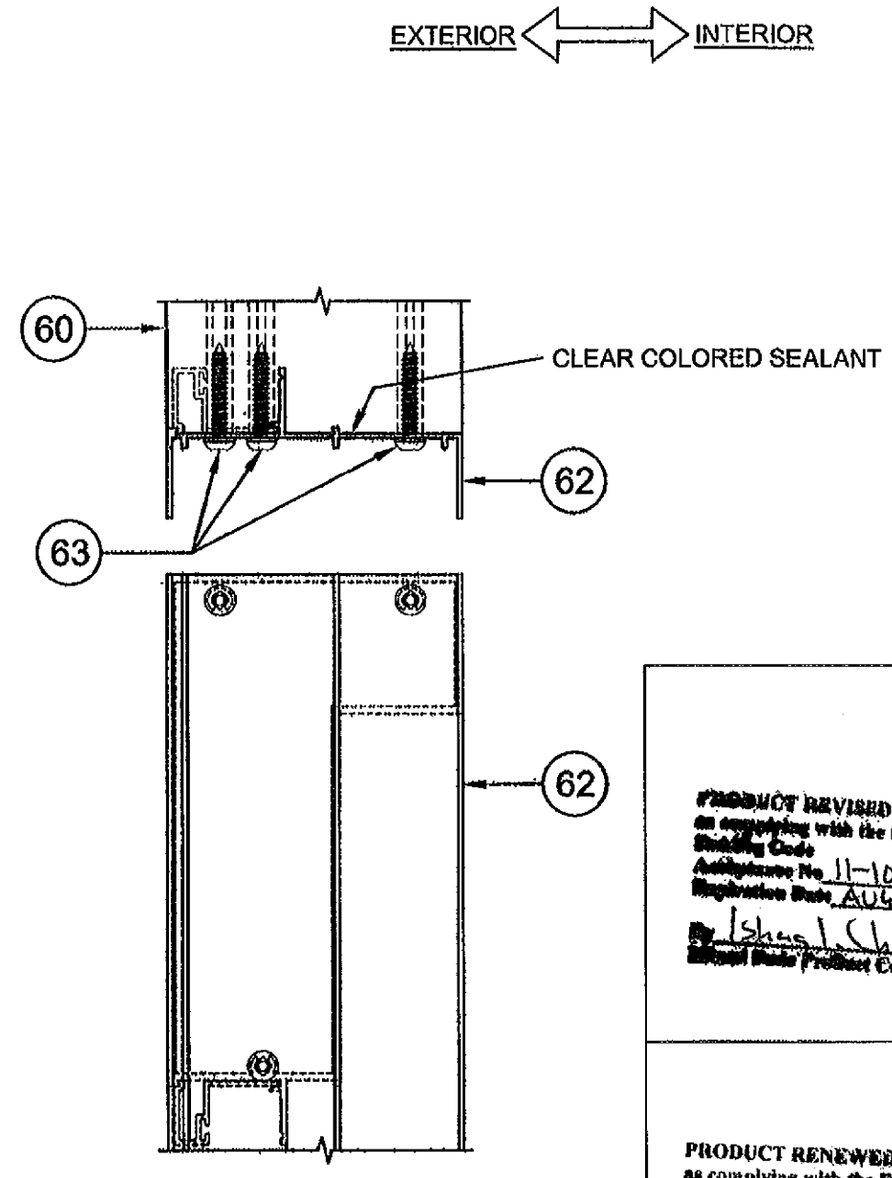

SL VIEW G-G

CORNER ASSEMBLY

PRODUCT REVISED
as complying with the Florida Building Code
Acceptance No. 11-1013.21
Expiration Date AUG 2, 2012
By Ishwar L. Chand
Miami-Dade Product Control

PRODUCT RENEWED
as complying with the Florida Building Code
Acceptance No. 12-0516.03
Expiration Date 08/02/17
By Ishwar L. Chand
Miami-Dade Product Control

ANTHONY LYNN MILLER
LICENSE
No. 58705
10/11/11
STATE OF FLORIDA
PROFESSIONAL ENGINEER
A. LYNN MILLER, P.E.
FL P.E.# 58705

Revised By:	Date:	Revisions:	
J.J.	10/10/11	C	NO CHANGE THIS SHEET
Revised By: F.K.	Date: 6/26/07	Revisions: B	NO CHANGES THIS SHEET
Revised By: F.K.	Date: 4/27/07	Revisions: A	CORRECT ITEM 40 WEATHERSTRIP & UPDATE ITEM 60 TO DOUBLE HOLLOW. ADD SILL HEIGHT DIM.
Drawn By: F.K.	Date: 1/15/07	Checked By: J.J.	Date: 2/28/07

1070 TECHNOLOGY DRIVE
NOKOMIS, FL 34275

P.O. BOX 1529
NOKOMIS, FL 34274

PGT
Visibly Better

Description: EXAMPLE ELEVATIONS

Title: ALUM. FRENCH DOOR & SIDE LITES, NON-IMPACT

Series/Model:	Scale:	Sheet:	Drawing No.	Rev:
FD101	1/2	4 of 11	11005-2	C

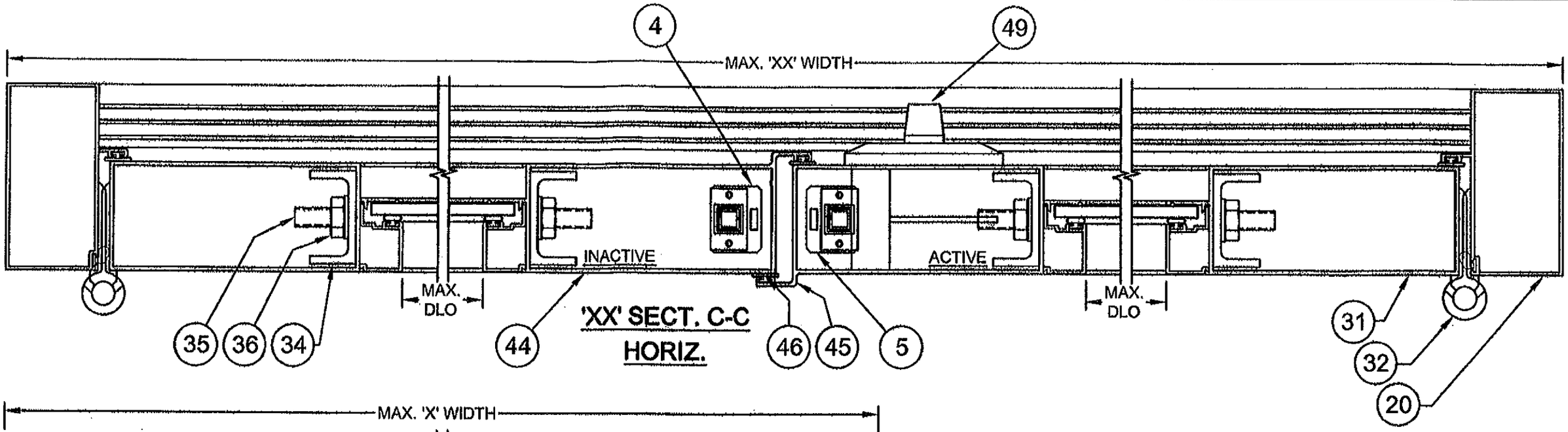

'XX' SECT. C-C
HORIZ.

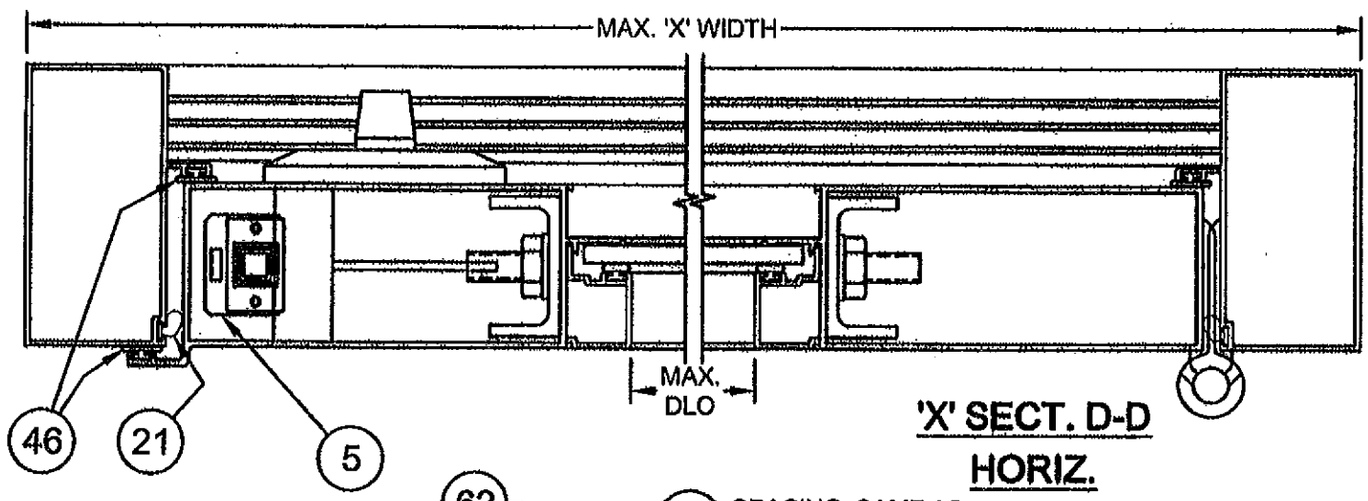

'X' SECT. D-D
HORIZ.

INTERIOR
EXTERIOR

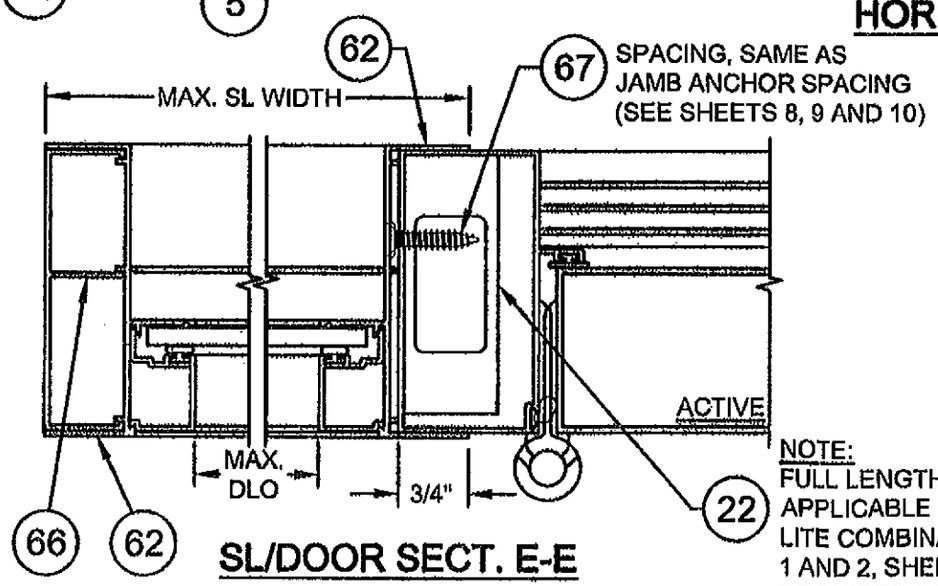

SL/DOOR SECT. E-E
HORIZ.

NOTE:
FULL LENGTH REINFORCEMENT APPLICABLE TO DOOR AND SIDE LITE COMBINATIONS FROM TABLES 1 AND 2, SHEET 1. ITEM 22 IS NOT REQUIRED WITH COMBINATIONS FROM TABLES 1A AND 2A, SHEET 2.

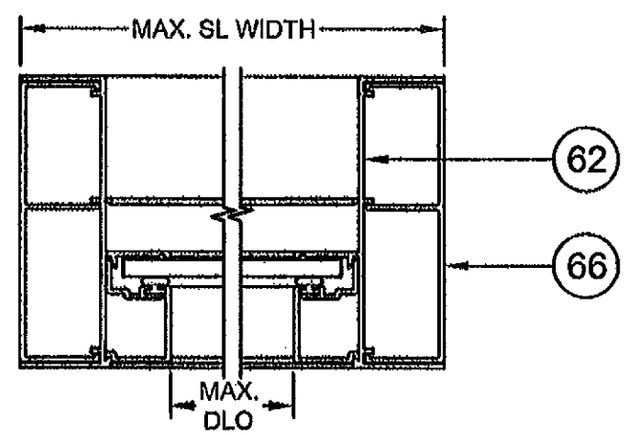

SL SECT. F-F
HORIZ. (STAND-ALONE)

PRODUCT REVISED
as complying with the Florida Building Code
Acceptance No. 11-1013.21
Expiration Date AUG 2, 2012
By Shaq L. Chand
Miami-Dade Product Control

PRODUCT RENEWED
as complying with the Florida Building Code
Acceptance No. 12-0516.03
Expiration Date 08/02/17
By Shaq L. Chand
Miami-Dade Product Control

ANTHONY LYNN MILLER
LICENSE
No. 58705
STATE OF FLORIDA
PROFESSIONAL ENGINEER
A. LYNN MILLER, P.E.
FL P.E.# 58705

Revised By:	Date:	Revisions:	
J.J.	10/10/11	C	NO CHANGE THIS SHEET
F.K.	6/25/07	B	NO CHANGES THIS SHEET
F.K.	4/27/07	A	CORRECT ITEMS 62 AND ADD ITEMS 4, 5 AND 49 (LOCK CLARIFICATION)
Drawn By: F.K.	Date: 1/15/07	Checked By: J.J.	Date: 2/28/07

1070 TECHNOLOGY DRIVE
NOKOMIS, FL 34275

P.O. BOX 1529
NOKOMIS, FL 34274

PGT
Visibly Better

Description: VERTICAL SECTIONS

Title: ALUM. FRENCH DOOR & SIDE LITES, NON-IMPACT

Series/Model:	Scale:	Sheet:	Drawing No.	Rev:
FD101	1/2	5 of 11	11005-2	C

ITEM	DWG #	PGT#	DESCRIPTION
1	943B	60411	FRAME HEAD
2	1010	6Q300	WSTP.,Q-LON .190 X .375 HIGH
3	7070	67070K	BULB WEATHERSTRIP .187 X .300 HIGH
4	955	7955X	FLUSHBOLT STRIKEPLATE
5	938	7938X	2 PT. LOCK STRIKEPLATE
6	956	7956A	FRAME HEAD STRIKEPLATE BACKING PLATE
7		7832X12FPXP	#8-32 X .500 PH. FL. MS - S.S. W/SILICONE PATCH
8	995	70995	GASKET (BETWEEN THRESHOLD & FRAME JAMB)
9	996	70996	GASKET (BETWEEN HEAD & FRAME JAMB)
10	952A	6533016	FILLER HEAD ADAPTER
11	11000	611000M	OUTSWING THRESHOLD
12	1670	671670	WSTP, .350 RD FOAM FILL T-SLOT (AMSBURY#32011)
13	11004A	611004M	OUTSWING THRESHOLD CHANNEL COVER
14	11001A	411001A	ACETAL SPACER .065 (INHOUSE INJECTION MOLDED)
15	11002A	411002A	ACETAL SPACER .095 (INHOUSE INJECTION MOLDED)
16	11003A	411003A	ACETAL SPACER .140 (INHOUSE INJECTION MOLDED)
20	915D	60380	FRAME JAMB (OUTSWING)
21	1010	6Q300	WSTP.,Q-LON .190 X .375 HIGH
22	6608	66608M	1X2-3/4X.650 TUBE MULL 6061-T5
23	1140	78X112PSATS	#8 X 1.500 PH SQ A T/S
24	1048	71048	JAMB SCREW COVER CAP
25	930	41721N	STRIKE PLATE INSERT
26	1118	710X34PFA	#10 X .750 PH. FL. SMS
27	7070	67070K	BULB WEATHERSTRIP .187 X .300 HIGH
30	910D	6910	DOOR RIM TOP & BOT. RAIL
31	911E	6911	DOOR RIM PANEL SIDE RAIL (OUTSWING)
32	917	7FRMO	HINGE ASSY. (917-1D)
33	1178	71058FP W,B	#10 X .625 PH. FL. SMS
34	913A	60378M	TRUSS CLAMP
35	1130	6TRODA	5/16-18 THREADED ROD
36	990	7990NUTA	5/16-18 FLANGED HEX NUT
37	914A	60379M	WEATHERSTRIP CHANNEL
38		7634FPT	#8 X .75 PH. FL. TEK
39	997	70997	GASKET (BETWEEN PANEL HEAD/SILL & PANEL STILES)
40	1023	67924G	WSTP., .187 X .250 HIGH, FINSEAL
41	928	41720	SLIDE BOLT ASSY. (INACTIVE PANEL ONLY) B
42	1145	76X12FPAW	#6 X .500 PH FL SMS TYPE BDS
43	1212	7P30GG	SILL DUST PLUG (INACTIVE PNL)
44	983B	6983	DOOR PANEL ASTRAGAL 1 (OUTSWING)
45	984B	6984	DOOR PANEL ASTRAGAL 2 (OUTSWING)
46	1213	6Q200K	WSTP.,Q-LON .190 X .200 HIGH
47	929	74UBLOK	LOCK SUPPORT ASSY. (41707 & 41708)
48	1139	7634F	#6 X .750 PH. FL. SMS
49	982	FD2PTAY	2 PT. LOCK ASSY.
50		6R180FS	RUBBER SLEEVE
51	930	41721	STRIKE PL. INSERT (INACTIVE PANEL)
52	931	7FRSPX	DEADBOLT STRIKE PLATE
53	1118	710X34PFA	#10 X .750 PH FL. SMS
54	957	70957X	HANDLE STRIKE PLATE
55	1118	710X34PFA	#10 X .750 PH FL. SMS

ITEM	DWG #	PGT#	DESCRIPTION
60	920D	6920D	SIDELITE HEADER
61	921D	6921	SIDELITE SILL
62	916B	60381	SIDELITE JAMB
63	1155	781PQA	#8 X 1.000 QUAD PN. SMS
64	998	7998	HEAD GASKETS (STOCKING #70998)
65	999	7999	SILL GASKETS (STOCKING #70999)
66	934A	61641M	SIDELITE JAMB ADAPTER
67			#12 SHEET METAL SCREW
70		712653K	SETTIING BLOCK, 3/32" X 1/4" X 1" W/PSA
71		71267K	SETTING BLOCK, 1/16" X 1/2" X 1" W/PSA
74	989	6989	BEAD, 3/16"
75	4046	644842	BEAD, 3/16" (FOR GRILL KIT)
76	4057	64057	BEAD, 5/8" IG
92	986	64986	BEAD, SIDE LITE INTERIOR
93	1224	6TP247	BULB, THICK (USED IN ALL EXTRUDED BEAD)
94	GLAZING SILICONE, DOW 899, 983 ~~OR EQUIVALENT~~ 11/15/11		
100	GLASS, 3/16" TEMPERED		
101	GLASS, 5/8" I.G., 3/16" TEMPERED, AIR SPACE, 3/16" TEMPERED		
102	11006A	41106A	ACETAL SPACER .295 (INHOUSE INJECTION MOULDED)
103	OFF-THE SHELF		DEAD BOLT LOCK B

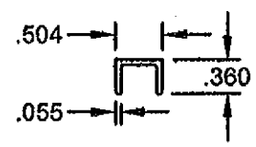

13 OUTSWING THRESHOLD CHANNEL COVER 6063-T6

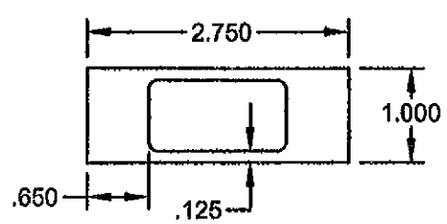

22 REINFORCEMENT 6063-T5

PRODUCT REVISED
as complying with the Florida Building Code
Acceptance No. 11-1013.21
Expiration Date Aug 2, 2012
By Ishag I. Chaus Jr.
Miami Dade Product Control

PRODUCT RENEWED
as complying with the Florida Building Code
Acceptance No. 12-0516.03
Expiration Date 08/02/17
By Ishag I. Chaus Jr.
Miami Dade Product Control

ANTHONY LYNN MILLER LICENSE No. 58705 STATE OF FLORIDA PROFESSIONAL ENGINEER
10/11/11
A. LYNN MILLER, P.E.
FL P.E.# 58705

Revised By:	Date:	Revisions:	
J.J.	10/10/11	C	NO CHANGE THIS SHEET
F.K.	6/25/07	B	ADD ITEM 109 DEAD BOLT AND "INACTIVE PANEL ONLY" TO ITEM 41.
F.K.	4/27/07	A	REVISED ITEM 60 REV. LETTER TO 'D'
Drawn By: F.K.	Date: 1/16/07	Checked By: J.J.	Date: 2/28/07

1070 TECHNOLOGY DRIVE
NOKOMIS, FL 34275
P.O. BOX 1529
NOKOMIS, FL 34274

PGT Visibly Better

Description: PARTS LIST & MISC. EXTRUSIONS

Title: ALUM. FRENCH DOOR & SIDE LITES, NON-IMPACT

Series/Model:	Scale:	Sheet:	Drawing No.	Rev:
FD101	1/2	6 of 11	11005-2	C

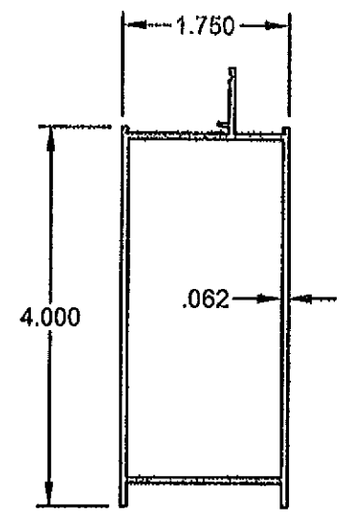

30 DOOR PANEL TOP & BOTTOM RAIL 6063-T5

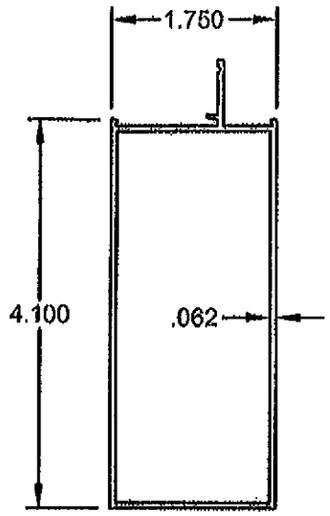

31 DOOR PANEL SIDE RAIL 6063-T5

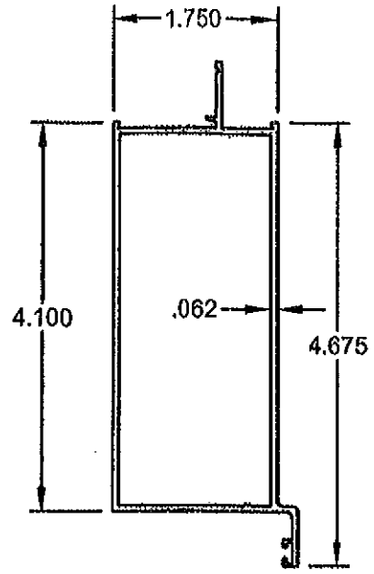

44 DOOR PANEL INTERIOR ASTRAGAL 6063-T5

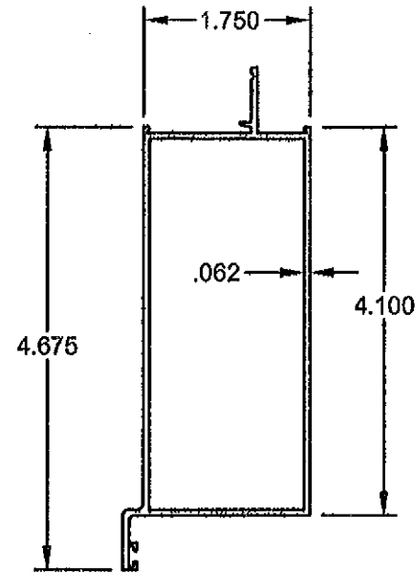

45 DOOR PANEL EXTERIOR ASTRAGAL 6063-T5

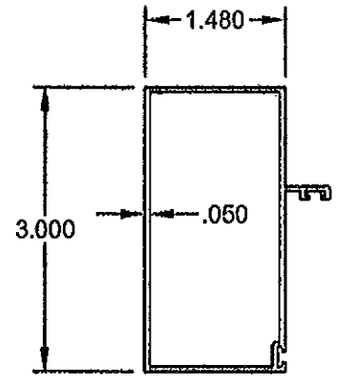

20 DOOR FRAME JAMB 6063-T6 B

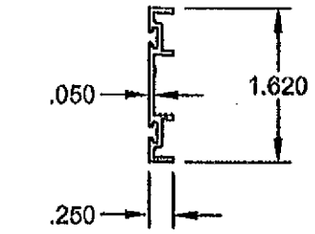

37 WEATHER STRIP CHANNEL 6063-T5

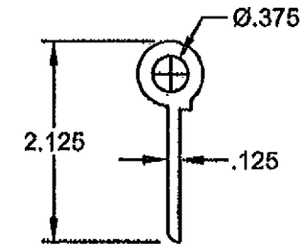

32 HINGE 6063-T5

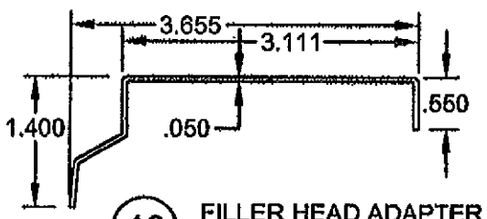

10 FILLER HEAD ADAPTER 6063-T6

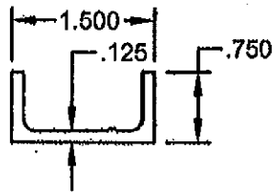

34 TRUSS CLAMP 6063-T5

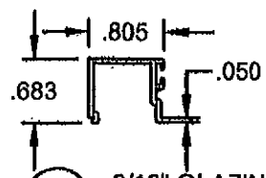

74 3/16" GLAZING BEAD 6063-T5

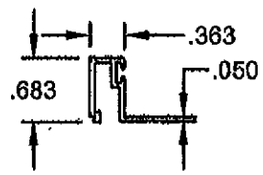

76 5/8" GLAZING BEAD 6063-T5

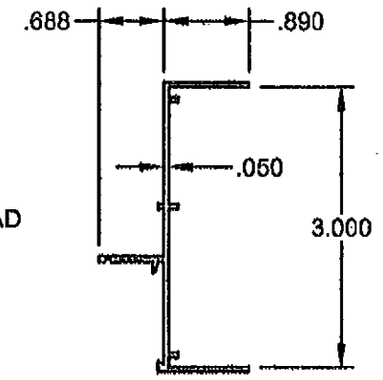

62 SL JAMB 6063-T6

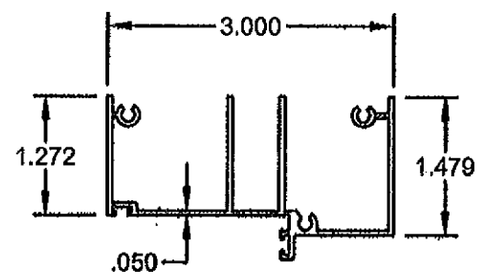

1 FRAME HEAD 6063-T6

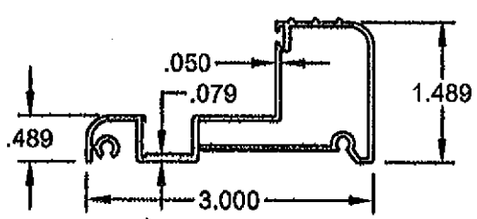

11 OUTSWING THRESHOLD 6063-T6

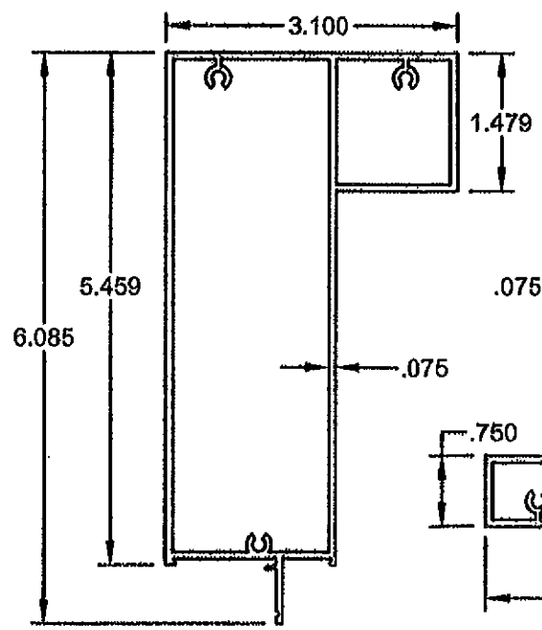

60 SL HEADER 6063-T6

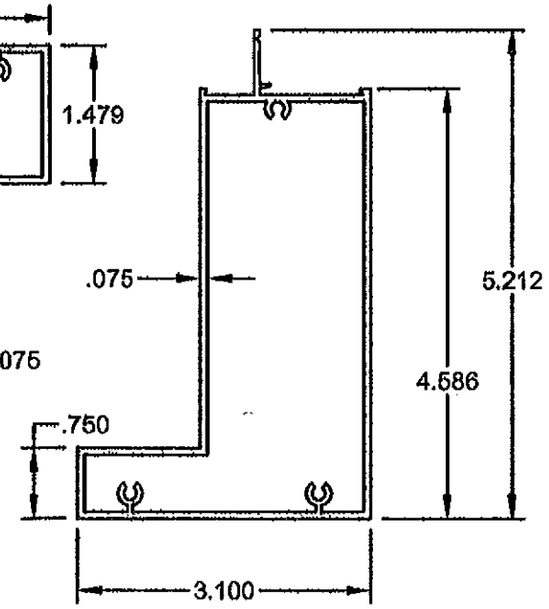

61 SL SILL 6063-T6

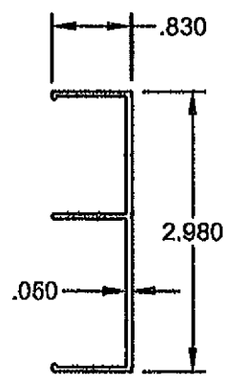

66 SL JAMB ADAPTER 6063-T6

PRODUCT REVISED
as complying with the Florida Building Code
Acceptance No. 11-1013.21
Expiration Date AUG 2, 2012
By Sheng I. Chang
Miami Dade Product Control

PRODUCT RENEWED
as complying with the Florida Building Code
Acceptance No. 12-0516.03
Expiration Date 08/02/17
By Sheng I. Chang
Miami Dade Product Control

ANTHONY LYNN MILLER
LICENSE
No. 58705
10/11/11
STATE OF FLORIDA
PROFESSIONAL ENGINEER
A. LYNN MILLER, P.E.
FL P.E.# 58705

Revsd By:	Date:	Revisions:	
J.J.	10/10/11	C	NO CHANGE THIS SHEET
F.K.	6/25/07	B	ADD "DOOR" TO ITEM 20
F.K.	4/27/07	A	UPDATED ITEM 60 TO DOUBLE HOLLOW
Drawn By: F.K.	Date: 1/15/07	Checked By: J.J.	Date: 2/28/07

1070 TECHNOLOGY DRIVE
NOKOMIS, FL 34275

P.O. BOX 1529
NOKOMIS, FL 34274

PGT Visibly Better

Description: EXTRUSION PROFILES

Title: ALUM. FRENCH DOOR & SIDE LITES, NON-IMPACT

Series/Model:	Scale:	Sheet	Drawing No.	Rev:
FD101	1/2	7 of 11	11005-2	C

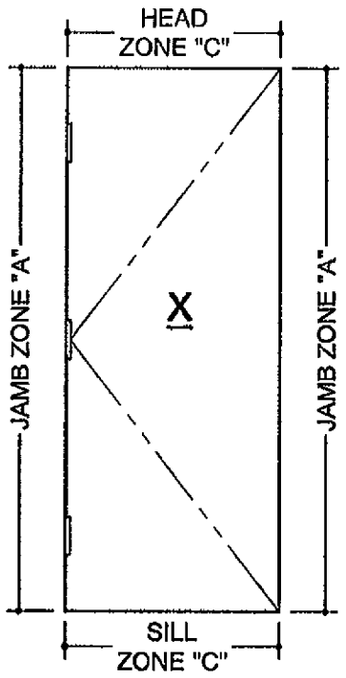

SEE TABLE 3., SHT. 9

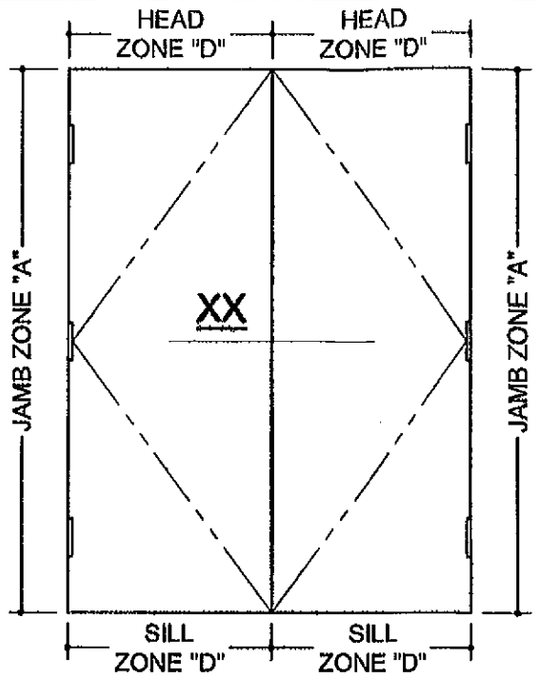

SEE TABLE 4., SHT. 9

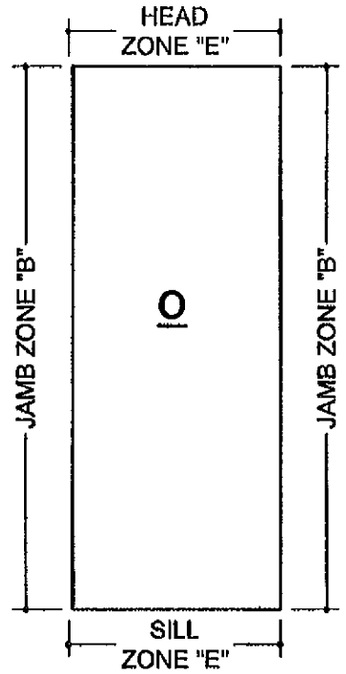

SEE TABLE 5., SHT. 9

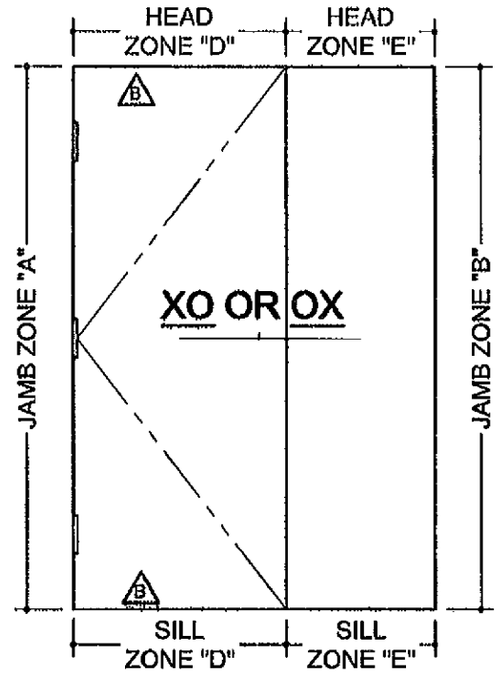

SEE TABLE 6., SHT. 10

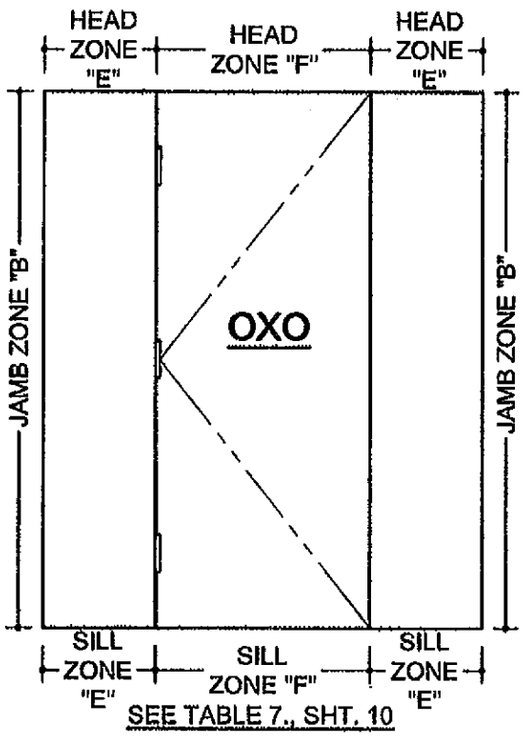

SEE TABLE 7., SHT. 10

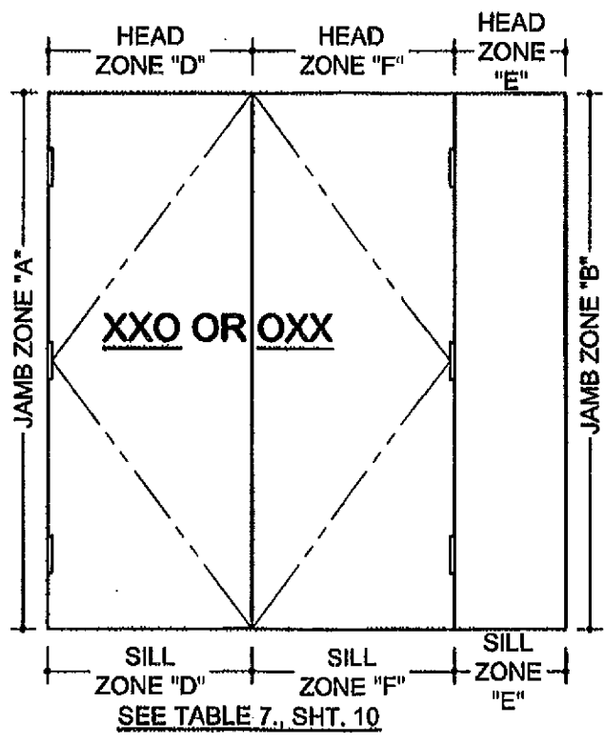

SEE TABLE 7., SHT. 10

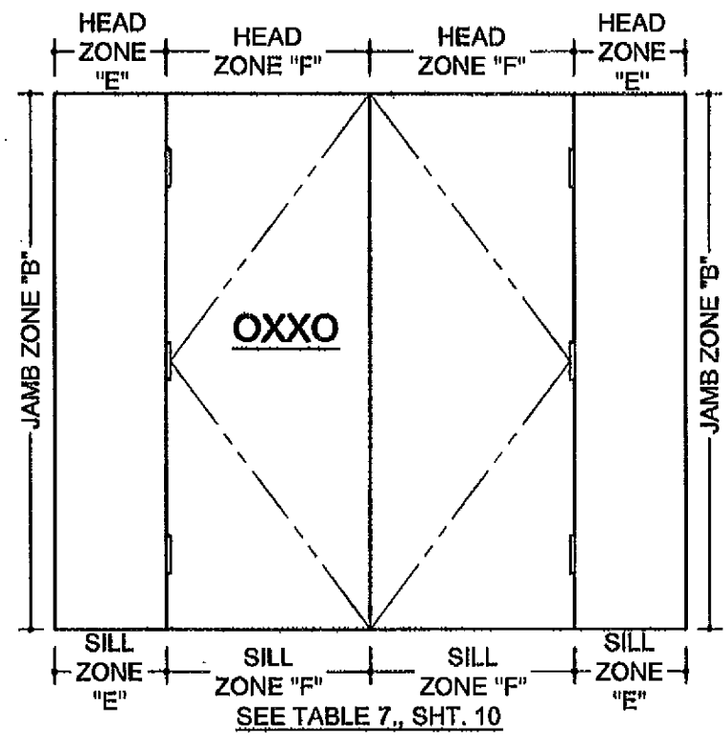

SEE TABLE 7., SHT. 10

NOTES:

1. APPROVED ANCHOR TYPES ARE: 1. 1/4" ELCO TAPCONS 2. 1/4" ELCO SS4 CRETE-FLEX MASONRY ANCHORS 3. #12 SCREWS
2. ANCHOR QUANTITIES ARE BASED ON SPACING AS FOLLOWS (3" MIN. O.C. FOR CONCRETE): SEE EXAMPLE OXXO ANCHOR LAYOUT ON SHEET 10.
   JAMBS (ALL): 13 1/4" MAX. FROM CORNERS AND 23 1/8" MAX. O.C.
   HEAD & SILL OF DOORS: 6" MAX. FROM CORNERS, 9" MAX. FROM ASTRAGAL CENTERS AND 20 7/8" MAX. O.C.
   HEAD & SILL OF SIDE LITES: 6" MAX. FROM CORNERS AND 24 3/4" MAX. O.C.
3. TO DETERMINE ANCHOR QUANTITIES FIND THE CONFIGURATION ABOVE THEN REFER TO THE APPROPRIATE TABLES ON SHEETS 9 AND 10.

PRODUCT REVISED
as complying with the Florida Building Code
Acceptance No. 11-1013.21
Expiration Date AUG 02, 2012
By Ishwar L. Chandra
Miami Dade Product Control

PRODUCT RENEWED
as complying with the Florida Building Code
Acceptance No. 12-0516.03
Expiration Date 08/02/17
By Ishwar L. Chandra
Miami Dade Product Control

ANTHONY LYNN MILLER
LICENSE
No. 58705
10/11/11
STATE OF FLORIDA
PROFESSIONAL ENGINEER

A. LYNN MILLER, P.E.
FL P.E.# 58705

Revised By:	Date:	Revisions:	
J.J.	10/10/11	C	NO CHANGE THIS SHEET
F.K.	6/25/07	B	CHANGE 'XO' OR 'XO' ANCHOR ZONE FROM 'C' TO 'D'
F.K.	4/27/07	A	ADD EXAMPLE ANCHOR LAYOUT REF. TO NOTE 2
Drawn By: F.K.	Date: 1/15/07	Checked By: J.J.	Date: 2/28/07

1070 TECHNOLOGY DRIVE
NOKOMIS, FL 34275

P.O. BOX 1529
NOKOMIS, FL 34274

PGT
Visibly Better

Description: ANCHORAGE, CONFIGURATIONS

Title: ALUM. FRENCH DOOR & SIDE LITES, NON-IMPACT

Series/Model:	Scale:	Sheet:	Drawing No.	Rev:
FD101	NTS	8 of 11	11005-2	C

TABLE 3. X DOORS

ANCHOR TYPE & SUBSTRATE	GLASS TYPES A AND B					
	2,3, WOOD			1,2, CONCRETE		
DOOR WIDTHS "X" - 25.500 TO 37.500	LOAD ZONES					
WIDTH x HT.	X - JAMB "A"	X - HEAD & SILL "C"	X - HEAD & SILL "F" (USE W/ TABLE 7., SHT. 10)	X - JAMB "A"	X - HEAD & SILL "C"	X - HEAD & SILL "F" (USE W/ TABLE 7., SHT. 10)
25.500 x 79.750	7	2	10	4	2	5
83.750	7	2	10	4	2	5
87.750	7	2	10	4	2	5
91.750	7	2	9	4	2	5
95.750	7	2	9	4	2	5
27.500 x 79.750	7	2	10	4	2	5
83.750	7	2	10	4	2	5
87.750	7	2	10	4	2	5
91.750	7	2	10	4	2	5
95.750	7	2	10	4	2	5
29.500 x 79.750	7	3	10	4	3	5
83.750	7	3	10	4	3	5
87.750	7	3	10	4	3	5
91.750	7	3	10	4	3	5
95.750	7	3	10	4	3	5
31.500 x 79.750	7	3	10	4	3	5
83.750	7	3	10	4	3	5
87.750	7	3	10	4	3	5
91.750	7	3	10	4	3	5
95.750	7	3	10	4	3	5
33.500 x 79.750	6	3	8	4	3	5
83.750	6	3	8	4	3	5
87.750	7	3	10	4	3	5
91.750	7	3	10	4	3	5
95.750	7	3	10	4	3	5
35.500 x 79.750	6	3	8	4	3	5
83.750	6	3	8	4	3	5
87.750	6	3	8	4	3	5
91.750	6	3	8	4	3	5
95.750	6	3	8	4	3	5
37.500 x 79.750	5	3	8	4	3	3
83.750	6	3	8	4	3	3
87.750	6	3	8	4	3	5
91.750	6	3	8	4	3	5
95.750	6	3	8	4	3	5

TABLE 4. XX DOORS (ALSO X DOOR OF XO & OX)

ANCHOR TYPE & SUBSTRATE	GLASS TYPES A AND B					
	2,3, WOOD			1,2, CONCRETE		
DOOR WIDTHS "XX" - 47.750 TO 71.750	LOAD ZONES					
WIDTH x HT.	XX - JAMB "A"	XX - HEAD & SILL "D" (USE W/ TABLE 6., SHT. 10) B	XX - HEAD & SILL "F" (USE W/ TABLE 7., SHT. 10, EA. ZONE)	XX - JAMB "A"	XX - HEAD & SILL "D" (USE W/ TABLE 6., SHT. 10) B	XX - HEAD & SILL "F" (USE W/ TABLE 7., SHT. 10, EA. ZONE)
47.750 x 79.750	6	5	8	4	3	5
83.750	6	4	7	4	3	5
87.750	6	4	7	4	3	5
91.750	6	4	7	4	3	5
95.750	6	4	7	4	3	5
51.750 x 79.750	6	5	8	4	3	5
83.750	6	5	8	4	3	5
87.750	6	4	7	4	3	5
91.750	6	4	7	4	3	5
95.750	6	4	7	4	3	5
55.750 x 79.750	6	5	8	4	3	5
83.750	6	5	8	4	3	5
87.750	6	5	8	4	3	5
91.750	6	5	8	4	3	5
95.750	6	4	7	4	3	5
59.750 x 79.750	6	5	8	4	3	5
83.750	6	5	8	4	3	5
87.750	6	5	8	4	3	5
91.750	6	5	8	4	3	5
95.750	6	5	8	4	3	5
63.750 x 79.750	6	5	8	4	3	5
83.750	6	5	8	4	3	5
87.750	6	5	8	4	3	5
91.750	6	5	8	4	3	5
95.750	6	5	8	4	3	5
67.750 x 79.750	5	5	8	4	3	3
83.750	6	5	8	4	3	5
87.750	6	5	8	4	3	5
91.750	6	5	8	4	3	5
95.750	6	5	8	4	3	5
71.750 x 79.750	5	5	8	4	3	3
83.750	5	5	8	4	3	3
87.750	6	5	8	4	3	5
91.750	6	5	8	4	3	5
95.750	6	5	8	4	3	5

TABLE 5. O SIDE LITE

ANCHOR TYPE & SUBSTRATE	GLASS TYPES A AND B			
	2,3, WOOD		1,2, CONCRETE	
WIDTHS "O" - 10.750 TO 36.750	LOAD ZONES			
WIDTH x HT.	O - JAMB "B"	O - HEAD & SILL "E"	O - JAMB "B"	O - HEAD & SILL "E"
10.750 x 79.750	4	2	4	2
83.750	5	2	4	2
87.750	5	2	4	2
91.750	5	2	4	2
95.750	5	2	4	2
12.750 x 79.750	5	2	4	2
83.750	5	2	4	2
87.750	5	2	4	2
91.750	6	2	4	2
95.750	6	2	4	2
19.000 x 79.750	6	2	4	2
83.750	6	2	4	2
87.750	6	2	4	2
91.750	6	2	4	2
95.750	6	2	4	2
21.750 x 79.750	6	2	4	2
83.750	6	2	4	2
87.750	6	2	4	2
91.750	6	2	4	2
95.750	6	2	4	2
27.750 x 79.750	6	2	4	2
83.750	6	2	4	2
87.750	6	2	4	2
91.750	6	2	4	2
95.750	6	2	4	2
36.125 x 79.750	5	3	4	3
83.750	6	3	4	3
87.750	6	3	4	3
91.750	6	3	4	3
95.750	6	3	4	3
36.750 x 79.750	5	3	4	3
83.750	5	3	4	3
87.750	6	3	4	3
91.750	6	3	4	3
95.750	6	3	4	3

APPROVED ANCHOR TYPES:

1. 1/4" ELCO TAPCONS
2. 1/4" ELCO SS4 CRETE-FLEX MASONRY ANCHORS
3. #12 STEEL SCREWS (G5)

PRODUCT REVISED
as complying with the Florida Building Code
Acceptance No. 11-1013.21
Expiration Date AUG 2, 2012
By Ishaq I. Chaudhry
Miami-Dade Product Control

PRODUCT RENEWED
as complying with the Florida Building Code
Acceptance No. 12-0516.03
Expiration Date 08/02/17
By Ishaq I. Chaudhry
Miami-Dade Product Control

ANTHONY LYNN MILLER
LICENSE
No. 58705
STATE OF FLORIDA
PROFESSIONAL ENGINEER
10/11/11

A. LYNN MILLER, P.E.
FL P.E.# 58705

Revised By:	Date:	Revisions:	
J.J.	10/10/11	C	NO CHANGE THIS SHEET
F.K.	6/25/07	B	ADD "USE W/ TABLE 6., SHT. 10" TO TABLE 4 FOR XO AND OX DOORS.
F.K.	4/27/07	A	ADD "EA. ZONE" TO TABLE 4, "F". UPDATE ALL TABLES DUE TO DP REVISION.
Drawn By: F.K.	Date: 1/15/07	Checked By: J.J.	Date: 2/28/07

1070 TECHNOLOGY DRIVE
NOKOMIS, FL 34275

P.O. BOX 1529
NOKOMIS, FL 34274

PGT
Visibly Better

Description: ANCHOR QTY. PER LOAD ZONE TABLES 3, 4 & 5

Title: ALUM. FRENCH DOOR & SIDE LITES, NON-IMPACT

Series/Model:	Scale:	Sheet:	Drawing No.	Rev:
FD101	NA	9 of 11	11005-2	C

TABLE 6. XO & OX DOORS

ANCHOR TYPE & SUBSTRATE	GLASS TYPES A AND B							
	2,3, WOOD				1,2, CONCRETE			
DOOR WIDTHS "X" - 25.500 TO 37.500	LOAD ZONES							
SIDE LITE WIDTH x HT.	O - JAMB "B"	O - HEAD & SILL "E"	X - HEAD & SILL "D" FROM XX DOOR (B)	X - JAMB "A"	O - JAMB "B"	O - HEAD & SILL "E"	X - HEAD & SILL "D" FROM XX DOOR (B)	X - JAMB "A"
10.750 x 79.750	4	3	USE ANCHOR QUANTITIES FROM TABLES 3. AND 4., SHEET 9 FOR APPLICABLE DOOR WIDTH (B)		4	2	USE ANCHOR QUANTITIES FROM TABLES 3. AND 4.,SHEET 9 FOR APPLICABLE DOOR WIDTH (B)	
83.750	5	3			4	2		
87.750	5	3			4	2		
91.750	5	3			4	2		
95.750	5	3			4	2		
12.750 x 79.750	5	3			4	2		
83.750	5	3			4	2		
87.750	5	3			4	2		
91.750	6	3			4	3		
95.750	6	3			4	3		
19.000 x 79.750	6	3			4	3		
83.750	6	3			4	3		
87.750	6	3			4	3		
91.750	6	3			4	3		
95.750	6	3			4	3		
21.750 x 79.750	6	3			4	3		
83.750	6	3			4	3		
87.750	6	3			4	3		
91.750	6	3			4	3		
95.750	6	3			4	3		
27.750 x 79.750	6	3			4	3		
83.750	6	3			4	3		
87.750	6	3			4	3		
91.750	6	3			4	3		
95.750	6	3			4	3		
36.125 x 79.750	5	3			4	3		
83.750	6	3			4	3		
87.750	6	3			4	3		
91.750	6	3			4	3		
95.750	6	3			4	3		
36.750 x 79.750	5	3			4	3		
83.750	5	3			4	3		
87.750	6	3			4	3		
91.750	6	3			4	3		
95.750	6	3			4	3		

TABLE 7. OXO, XXO, OXX & OXXO DOORS

ANCHOR TYPE & SUBSTRATE	GLASS TYPES A AND B					
	2,3, WOOD			1,2, CONCRETE		
DOOR WIDTHS "X" - 25.500 TO 37.500 "XX" - 47.750 TO 71.750	LOAD ZONES					
SIDE LITE WIDTH x HT.	O - JAMB "B"	O - HEAD & SILL "E"	X,XX - HEAD & SILL "F"	O - JAMB "B"	O - HEAD & SILL "E"	X,XX - HEAD & SILL "F"
10.750 x 79.750	4	3	USE ANCHOR QUANTITIES FROM TABLE 3. OR 4. SHEET 8 FOR EACH ZONE OF APPLICABLE DOOR WIDTH	4	2	USE ANCHOR QUANTITIES FROM TABLE 3. OR 4. SHEET 8 FOR EACH ZONE OF APPLICABLE DOOR WIDTH
83.750	5	3		4	2	
87.750	5	3		4	2	
91.750	5	3		4	2	
95.750	5	3		4	2	
12.750 x 79.750	5	3		4	2	
83.750	5	3		4	2	
87.750	5	3		4	2	
91.750	6	3		4	3	
95.750	6	3		4	3	
19.000 x 79.750	6	3		4	3	
83.750	6	3		4	3	
87.750	6	3		4	3	
91.750	6	3		4	3	
95.750	6	3		4	3	
21.750 x 79.750	6	3		4	3	
83.750	6	3		4	3	
87.750	6	3		4	3	
91.750	6	3		4	3	
95.750	6	3		4	3	
27.750 x 79.750	6	3		4	3	
83.750	6	3		4	3	
87.750	6	3		4	3	
91.750	6	3		4	3	
95.750	6	3		4	3	
36.125 x 79.750	5	3		4	3	
83.750	6	3		4	3	
87.750	6	3		4	3	
91.750	6	3		4	3	
95.750	6	3		4	3	
36.750 x 79.750	5	3		4	3	
83.750	5	3		4	3	
87.750	6	3		4	3	
91.750	6	3		4	3	
95.750	6	3		(4)	(3)	

APPROVED ANCHOR TYPES:
1. 1/4" ELCO TAPCONS
2. 1/4" ELCO SS4 CRETE-FLEX MASONRY ANCHORS
3. #12 STEEL SCREWS (G5)

(16) ANCHORS REQUIRED AT HEAD AND SILL FOR CONCRETE INSTALLATION. ALL DIMENSIONS ARE MAX. EXCEPT 3" MIN. ON-CENTER APPLIES TO CONCRETE INSTALLATIONS. (B)

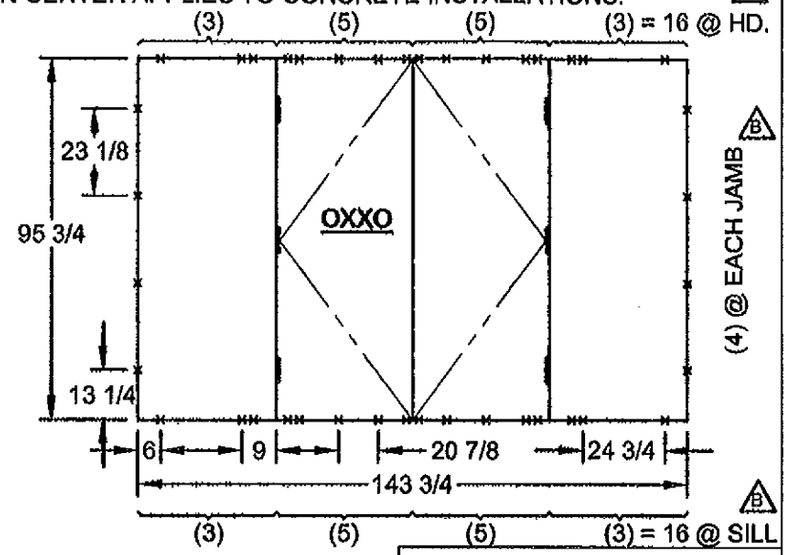

EXAMPLE LARGEST OXXO ANCHORAGE

A. 36 3/4" x 95 3/4" SIDE LITE ANCHORS FROM TABLE 7 EA. JAMB "B", AND EA. HEAD AND SILL "E" ZONE PLUS;
B. 71 3/4" x 95 3/4" XX DOOR ANCHORS FROM TABLE 4, SHT. 9 AT EACH "F" ZONE.

SEE ENCIRCLED VALUES, SHTS. 9 AND 10.

SOLUTION:
TOTALS (4) ANCHORS EA. JAMB AND 3+5+5+3 = (16) ANCHORS AT EACH HEAD AND SILL. (B)

PRODUCT REVIEWED as complying with the Florida Building Code
Acceptance No. 11-1013.21
Expiration Date Aug 2, 2012
By Miami Dade Product Control

PRODUCT RENEWED as complying with the Florida Building Code
Acceptance No. 12-0516.03
Expiration Date 08/02/2017
By Miami Dade Product Control

ANTHONY LYNN MILLER LICENSE No. 58705 STATE OF FLORIDA PROFESSIONAL ENGINEER
A. LYNN MILLER, P.E.
FL P.E.# 58705

Revised By:	Date:	Revisions:	
J.J.	10/10/11	C	NO CHANGE THIS SHEET
F.K.	6/26/07	B	CHANGE 'XO' OR 'XO' HEAD ZONE FROM "C" TO "D". ENHANCE EXAMPLE.
F.K.	4/27/07	A	ADD "EACH ZONE OF" TO TABLE 7 "F". UPDATE ALL TABLES DUE TO DP REV. ADD EXAMPLE OXXO ANCHOR LAYOUT.
Drawn By: F.K.	Date: 1/15/07	Checked By: J.J.	Date: 2/28/07

1070 TECHNOLOGY DRIVE
NOKOMIS, FL 34275
P.O. BOX 1529
NOKOMIS, FL 34274

PGT Visibly Better

Description: ANCHOR QTY. PER LOAD ZONE TABLES 6 & 7
Title: ALUM. FRENCH DOOR & SIDE LITES, NON-IMPACT

Series/Model:	Scale:	Sheet:	Drawing No.	Rev:
FD101	NA	10 of 11	11005-2	C

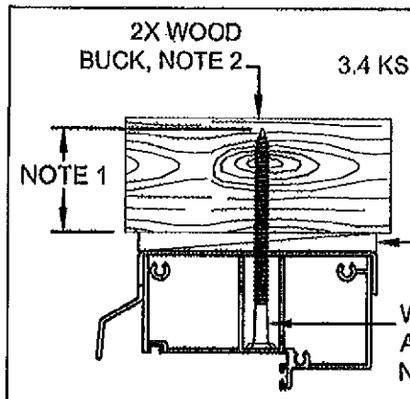

DOOR HEAD (WOOD)

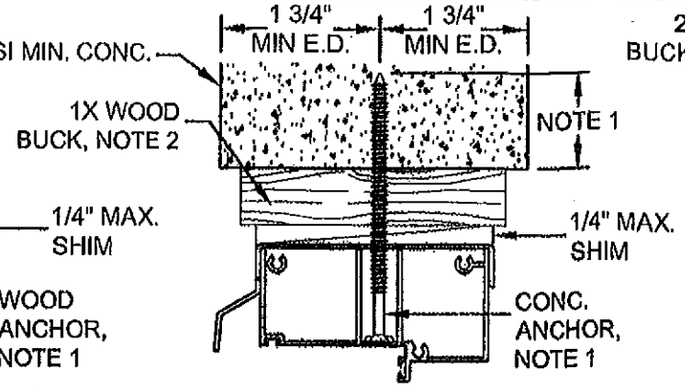

DOOR HEAD (CONC)

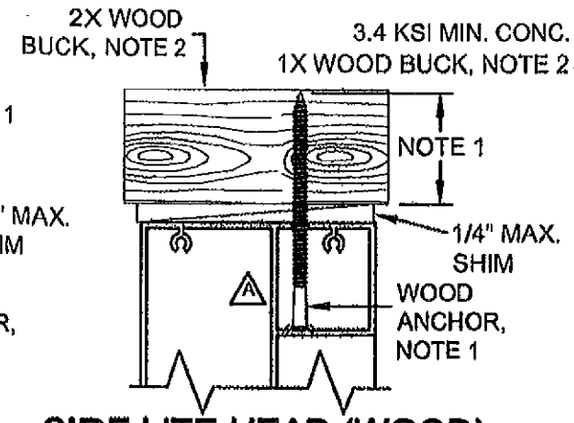

SIDE LITE HEAD (WOOD)

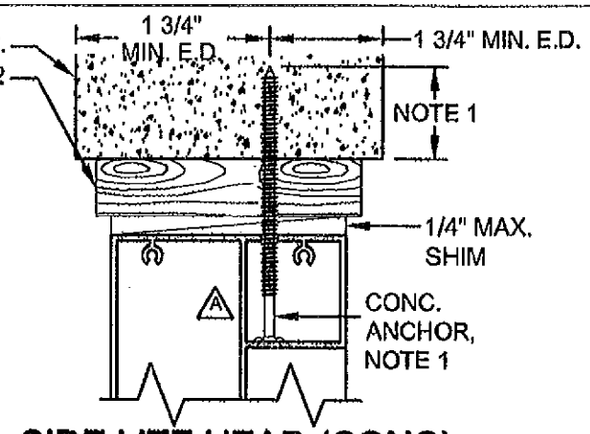

SIDE LITE HEAD (CONC)

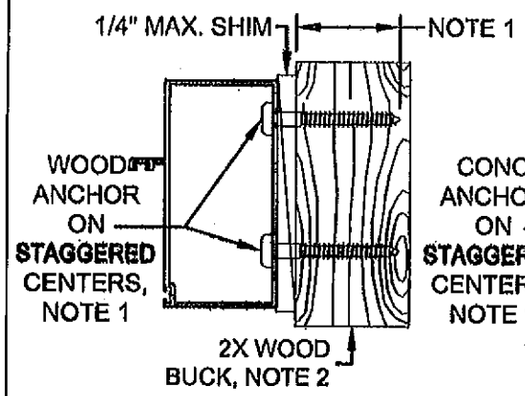

DOOR JAMB (WOOD)

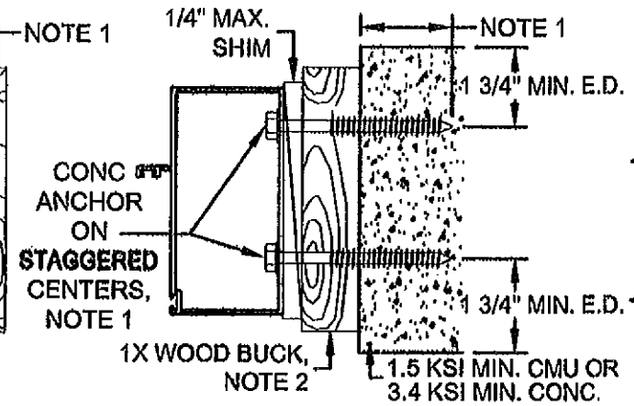

DOOR JAMB (CONC)

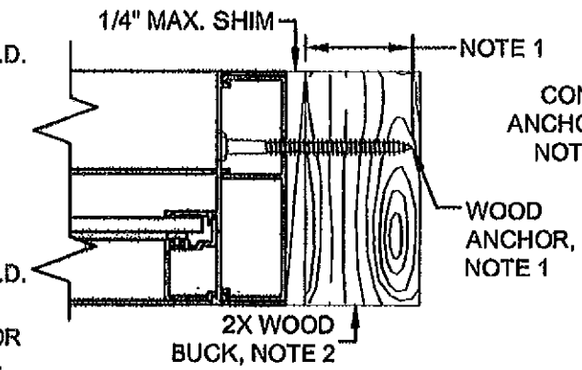

SIDE LITE JAMB (WOOD)

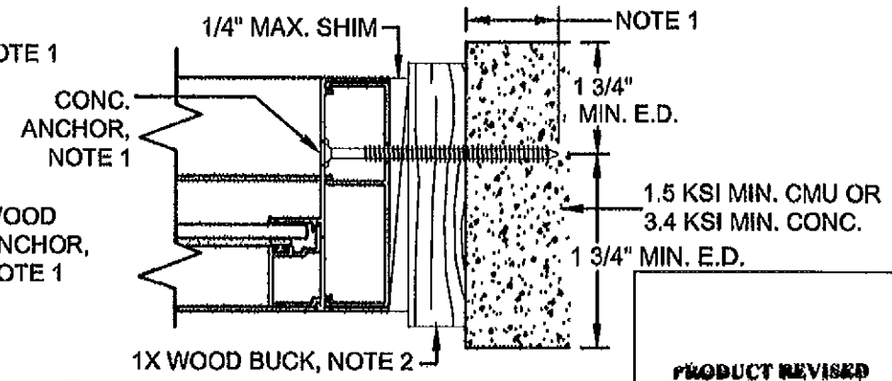

SIDE LITE JAMB (CONC)

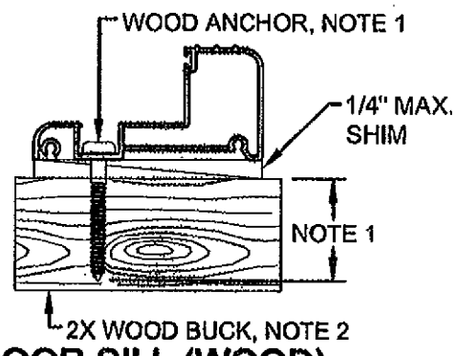

DOOR SILL (WOOD)

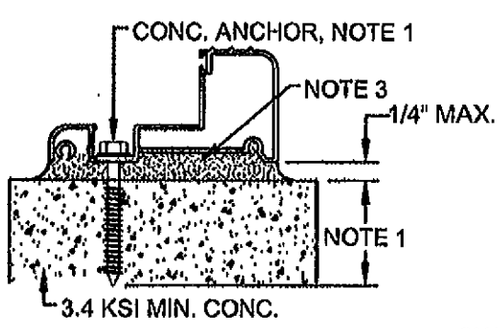

DOOR SILL (CONC)

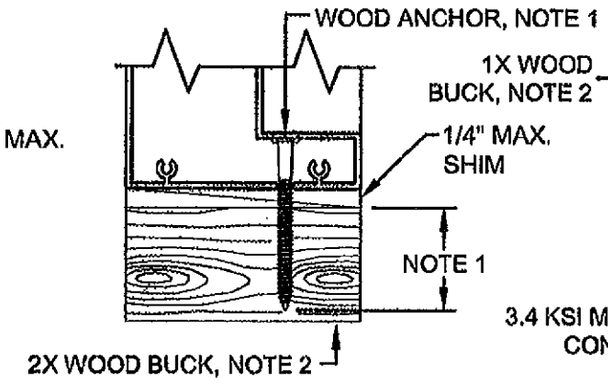

SIDE LITE SILL (WOOD)

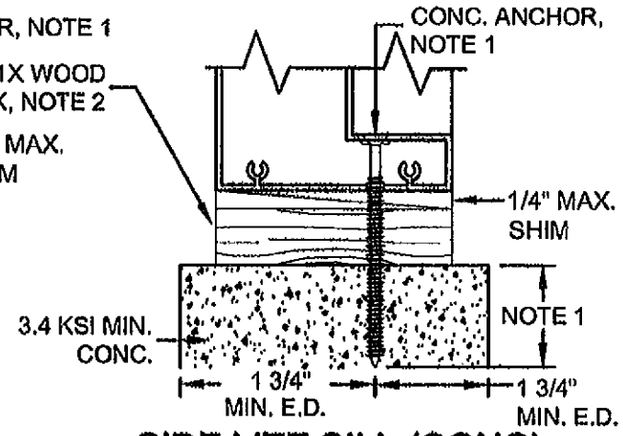

SIDE LITE SILL (CONC)

PRODUCT REVISED
as complying with the Florida Building Code
Acceptance No. 11-1013.21
Expiration Date Aug 2, 2012
By Miami Dade Product Control

PRODUCT RENEWED
as complying with the Florida Building Code
Acceptance No. 12-0516.03
Expiration Date 08/02/2017
By Miami Dade Product Control

NOTES:

1. FOR CONCRETE INSTALLATIONS IN MIAMI-DADE COUNTY, USE ONLY MIAMI-DADE COUNTY APPROVED ELCO 1/4" TAPCONS EMBEDDED 1 3/8" MIN. OR 1/4" SS4 CRETE-FLEX EMBEDDED 1 3/4" MIN. THE MINIMUM DISTANCE FROM CENTER OF ANCHOR TO CONCRETE EDGE IS 1 3/4". FOR WOOD INSTALLATIONS USE #12 SCREWS OR ELCO 1/4" SS4 CRETE-FLEX ANCHORS EMBEDDED 1 3/8" MIN.
2. WOOD BUCKS DEPICTED AS 1x ARE LESS THAN 1 1/2" THICK. 1x WOOD BUCKS ARE OPTIONAL IF UNIT IS INSTALLED DIRECTLY TO SOLID CONCRETE. WOOD BUCKS DEPICTED AS 2x ARE 1 1/2" THICK OR GREATER. INSTALLATION TO THE SUBSTRATE OF WOOD BUCKS TO BE ENGINEERED BY OTHERS OR AS APPROVED BY THE AUTHORITY HAVING JURISDICTION (AHJ).
3. IF SILL IS TIGHT TO SUBSTRATE, GROUT OR OTHER MATERIAL IS NOT REQUIRED. IF USED, NON-SHRINK, NON-METALLIC GROUT (3350 PSI MIN.), (DONE BY OTHERS) MUST FULLY SUPPORT THE ENTIRE LENGTH OF THE SILL THAT IS NOT TIGHT TO THE SUBSTRATE, AND TRANSFER SHEAR LOAD TO SUBSTRATE. IF SUBSTRATE IS WOOD, 30# FELT PAPER OR MASTIC IS REQUIRED BETWEEN THE GROUT AND WOOD SUBSTRATE, OR AS APPROVED BY THE AUTHORITY HAVING JURISDICTION.

Revised By:	Date:	Revisions:	
J.J.	10/10/11	C	NO CHANGE THIS SHEET
F.K.	6/28/07	B	NO CHANGES THIS SHEET
F.K.	4/27/07	A	UPDATE SIDE LITE HEAD TO DOUBLE HOLLOW.
Drawn By: F.K.	Date: 1/15/07	Checked By: J.J.	Date: 2/28/07

1070 TECHNOLOGY DRIVE
NOKOMIS, FL 34275

P.O. BOX 1529
NOKOMIS, FL 34274

PGT Visibly Better

Description: ANCHORAGE DETAILS

Title: ALUM. FRENCH DOOR & SIDE LITES, NON-IMPACT

Series/Model:	Scale:	Sheet:	Drawing No.	Rev:
FD101	NTS	11 of 11	11005-2	C

ANTHONY LYNN MILLER
LICENSE
No. 58705
10/11/11
STATE OF FLORIDA
PROFESSIONAL ENGINEER

A. LYNN MILLER, P.E.
FL P.E.# 58705